EXTERNAL CLADDING

PRIMELINE® WEATHERBOARDS, HARDIPLANK® CLADDING, PANELCLAD® SHEETS AND HARDIFLEX® SHEETS

AUSTRALIA
SEPTEMBER 2005

TECHNICAL SPECIFICATION

James Hardie®

CONTENTS

1 INTRODUCTION 2
1.1 Application 2
1.2 Material selection 2

2 FRAMING, FIXING AND INSTALLATION 3
2.1 Framing 3
2.2 Fixing 3
2.3 Installation 5

3 SHEET CLADDING 6
3.1 General 6
3.2 Bracing 6
3.3 Fixing 6
3.4 Installation 7
3.5 Jointing and corners 7

4 PRIMELINE® WEATHERBOARDS 8
4.1 General 8
4.2 Heritage and Chamfer profile 8
4.3 Summit and Newport profiles 9

5 HARDIPLANK® CLADDING 10
5.1 General 10
5.2 Bracing 10
5.3 Fixing 10
5.4 Installation 11
5.5 Jointing 11

6 SAFE WORKING PRACTICES 12
Warning 12
Recommended safe working practices 12
Working instructions 12
Hole-forming 13
Storage and handling 13
Quality 13

7 PRODUCT INFORMATION 13
7.1 General 13
7.2 Product mass 13
7.3 Durability 13
7.4 Alpine regions 13

8 COMPONENTS 14
8.1 Sheet cladding 14
8.2 PrimeLine weatherboards 16
8.3 HardiPlank cladding 18

9 DETAILS 21
9.1 General 21
9.2 HardiPlank cladding and PrimeLine weatherboard details 21

10 WARRANTY 31

WE VALUE YOUR FEEDBACK

To continuously improve the development of our products and systems, we value your input. Please send any suggestions, including your name, contact details, and relevant sketches to:

Ask James Hardie™
Fax 02 9638 9535
literaturefeedback@jameshardie.com.au

1 INTRODUCTION

1.1 APPLICATION

The good looking, versatile sheets, weatherboards and planks made in Australia by James Hardie are ideally suited to the local conditions that shape our homes, towns and cities.

With their inherent design flexibility, James Hardie fibre cement products contribute to inspirational new homes, renovations and commercial buildings. The simple lines of individual products can enhance classic, period or contemporary designs. Whatever the style, using James Hardie fibre cement products will ensure it needs little maintenance, over a long life.

James Hardie fibre cement building materials are resistant to rotting, fire, or permanent water and termite damage, when installed and maintained in accordance with James Hardie's published installation instructions. Made from cellulose fibre, portland cement and sand, James Hardie fibre cement products are deemed by the Building Code of Australia (BCA) as non-combustible and termite resistant materials.

They are also easy to work with, durable and low maintenance. These qualities make them the ideal choice for homeowners and renovators as well as professional builders, designers and architects.

The specifier or other party responsible for the project must ensure the details in this specification are appropriate for the intended application and additional detailing is performed for specific design or any areas that fall outside the scope and specifications of this manual.

Make sure your information is up to date
When specifying or installing James Hardie products, ensure you have the current manual. If you're not sure you do, or if you need more information, visit www.jameshardie.com.au or Ask James Hardie™ on 13 11 03.

1.2 MATERIAL SELECTION

1.2.1 General

The comprehensive range of materials available to clad houses, and the way in which these options can be combined and joined, gives designers and builders a wide choice of low maintenance solutions to suit virtually any requirement. Products are manufactured in two main forms: sheets and weatherboards or planks. These products come in various thicknesses and, in the case of weatherboards and planks, widths and profiles.

Applications include all forms of external cladding to suit all types of construction including ground level and upper storey extensions, gable ends and feature walls.

1.2.2 HardiFlex® sheets

HardiFlex sheets have square edges and come in two thicknesses, 4.5mm and 6mm, and in a variety of lengths that can be easily trimmed to length on site.

HardiFlex sheets are normally jointed with a PVC straight joint mould and finished at corners with surface mounted PVC corner moulds. Butt vee jointing is also possible. In Queensland, bevel edge sheets are available to reduce on-site preparation.

1.2.3 PanelClad® sheets

PanelClad sheets are available in two styles, Stucco, replicating a hand trowelled, cement render finish, and TextureLine, with the appearance of a rough hewn board and batten finish. Both types of sheets are normally 6mm thick and are joined with a PVC mould, both can be finished at corners with surface mounted PVC corner moulds.

1.2.4 PrimeLine® weatherboards

PrimeLine weatherboards are available in four milled profiles that are 9mm thick and finished with a high quality prime coat that saves the painter time on site.

The Heritage profile is a double width board that allows faster wall coverage. The Heritage and Chamfer profiles have rebated edges that create a shadow line effect.

The other PrimeLine profiles have concealed fixed using the concealed HardiLock® fixing system. The Summit profile features a slender beaded edge and strong lap line, and the narrower Newport profile gives a neat, smooth appearance. The PVC HardiLock spline that runs along the back of the Summit and Newport profiles fits neatly over the lower board and locks the board securely into position.

Nails are needed at each stud at the top of each Summit or Newport weatherboard. The bottom of the next positioned board conceals the nails of the previous board. This allows for faster installation with either on stud or off-stud jointing. For fastener requirements in a bracing application, refer to the Structural bracing Design Manual.

Easy to use aluminium snap-on corners and variable corner accessories are available to give a neat, attractive finish.

1.2.5 HardiPlank® cladding

HardiPlank cladding is available in four 7.5mm thick profiles. Woodgrain is available in two widths, 230 and 300mm and has a traditional woodgrain finish; Smooth is available in the same widths, with a smooth finish and straight, modern lines.

Both Rusticated and Old Style are available in a 205mm width. Rusticated is pre-primed, with a subtle timber grain and rebated edges to create shadow lines. Old Style has a smooth surface and rebated edges.

1.2.6 Shingled siding

Shingled siding is ideal for cladding bay windows, gables, infill areas above and below windows and for second storey extensions and additions. It is available in a 240mm width, with a band sawn timber finish and regular smooth recesses notched at regular intervals.

1.2.7 HardiTex® base sheet

HardiTex base sheet is the foundation for a lightweight cladding system that is finished with texture coating to give the appearance of rendered and painted masonry. It also minimises foundation and construction costs. Refer to the separate James Hardie HardiTex base sheet technical specification.

1.2.8 Successful installation

The correct design of the supporting framework and correct selection and fixing of the sheet, weatherboard or plank cladding material, will contribute to the overall success of all James Hardie external cladding systems described in this manual.

This manual contains separate sections covering the various types of cladding suitable for both single and multi storey houses.

1.2.9 Finishes

PrimeLine weatherboards, HardiPlank Rusticated and HardiPlank Rough Cut* come pre-primed and can be readily installed for faster on site finishing. To ensure the durability of James Hardie external cladding products, the exterior surface must be finished with a suitable paint or texture system in accordance with the coating manufacturer's written recommendations for fibre cement substrates.

Stains containing linseed oil are specifically designed for wood and may not be suitable for fibre cement cladding products, primed or unprimed. Semi-transparent stains can vary in uniformity of appearance depending on method of application and conditions and will require a high level of skill and craftsmanship to achieve a uniform appearance. Clear coats have not proven durable in exterior exposure and James Hardie considers them a maintenance item that may require application of a refurbishing sealer at regular intervals. James Hardie does not warrant the appearance or durability of semi-transparent stains and clear coats.

* WA supply only

2 FRAMING, FIXING AND INSTALLATION

2.1 FRAMING

2.1.1 General

Sheets, weatherboards and planks can be fixed to either timber or light gauge domestic type steel framing. The framing used must comply with the relevant building regulations and standards and the requirements of this manual.

Frames must be straight and true to provide a flush face to receive the sheeting. A suggested maximum tolerance of between 3mm and 4mm in any 3000mm length of frame will give best results. Sheets, weatherboards and planks will not straighten excessively warped or distorted frames and any warping may still be visible after the external cladding is applied.

2.1.2 Timber

'Timber used for house construction must have the level of durability appropriate for the relevant climate and expected service life and conditions including exposure to insect attacks or to moisture, which could cause decay.'

Reference AS1684.2 'Residential Timber Framed Construction'.

Use only seasoned timber. Unseasoned timber must not be used as it is prone to shrinkage and can cause sheets, weatherboards, planks and frames to move.

2.1.3 Steel

The base metal thickness of a steel frame must be between 0.55 and 1.6mm (BMT).

2.2 FIXING

2.2.1 General

Select the fastener suitable for the required framing from the appropriate product section depending on the type of framing, either timber or metal. (Refer to Sections 3, 4 or 5.)

NOTE

At least Class 3 external grade finish fasteners must be used for all external applications.

2.2.2 Fastener durability

Fasteners must have the appropriate level of durability required for the intended project. This is particularly important in coastal areas located within 1km of the shoreline or large expanses of salt water, areas subject to salt spray and other corrosive environments.

Fasteners must be fully compatible with all other materials that they are in contact with to ensure the durability and integrity of the assembly.

Contact fastener manufacturers for more information.

2.2.3 Adhesives

Adhesives must not be used to attach sheets, weatherboards or planks to the frame.

NOTE

Fasteners must not be overdriven as this can reduce the holding capacity of the cladding. If the nailing depth cannot be controlled adequately when gun nailing, under-drive fasteners then tap flush with a hammer. Refer to Figure 1.

When gun nailing, refer to Table 1.

TABLE 1

RECOMMENDED GUN NAILING				
COIL NAILER		NAILS		
Manufacturer	Name	Manufacturer	Name	Size
Hitachi	VH650 coil nailer	Otter	Galv. coil nail	38mm x 2.5mm dia. 45mm x 2.2mm dia. 50mm x 2.2mm dia.
Paslode	Impulse compact nailer (B20544)	Paslode	Impulse DekFast® 50mm Value Pack (B20561V)	50mm x 2.87mm dia.
			Impulse DekFast® 50mm Handy Pack (B20557)	50mm x 2.87mm dia.
Duo-Fast	KD665A coil nailer (Part No. D40040)	Duo-Fast	C27/32 GD coil nail (D41800)	32mm x 2.7mm dia.
Stanley-Bostitch	N80C coil nailer	Stanley-Bostitch	AC45P250 gal coil nail	45mm x 2.5mm dia.
Senco	SCN-60 coil nailer (fitted with adjustable depth of drive)	Senco	BTN 45 ADB Weatherex gal and Sencoted	45mm x 2.5mm dia.

* This nail will also fit the Bostitch N80C coil nailer.

NOTES

1. Fasteners with equivalent dimensions, (ie head size and shape, shank diameter and length to those above) are acceptable for use.
2. All fasteners are to be galvanised or suitably coated for intended external application.
3. Nailing guns must be fitted with flush drive attachments.
4. Some nailing guns incorporate an adjustable head set to control nail depth (eg Duo-Fast coil nailer and Senco coil nailer).
5. When gun nailing, apply pressure to the face of the cladding by holding the cladding against the stud to reduce blow out at back of the cladding.

Nail gun manufacturers have supplied the information contained in this table. Should a nail gun model or nail shown in the table not be available, please contact the relevant nail gun manufacturer for advice.

If the nail gun overdrives sheets, contact nail gun manufacturer for advice.

2.2.4 Steel

Fasteners should be screwed as close as possible to the stud corners to avoid deflection of the stud flange. Refer to Figure 2.

2.2.5 Screw gun specification

Use variable speed screw guns with high torque, a maximum speed of 2500rpm, fitted with a depth control attachment.

Set the depth control attachment to avoid overdriving. As the screw thread begins to pull into the steel frame, drop the revs back to bed the head flush with the surface of the sheet.

2.3 INSTALLATION

2.3.1 Moisture management

2.3.1.1 General

It is the responsibility of the builders and designers to identify moisture related risks associated with any particular building design.

It is the responsibility of the builder to ensure appropriate moisture management is provided during framed wall construction through effective use of flashings, sealants and vapour permeable membranes such as vapour permeable sarking, building wraps, vapour retarders and damp-proof course. Before installing cladding, all wall openings, penetrations, intersections, connections, window sills, heads and jambs must incorporate appropriate flashing and waterproofing.

Materials, components and their installation that are used to manage moisture in framed wall construction must, at a minimum, comply with the requirements of relevant standards, building codes and the manufacturer's specifications.

2.3.1.2 Flashing

Where sheets, weatherboards or planks are finished against horizontal flashings, ensure the underside of the external cladding is a minimum of 50mm clear of the horizontal leg of the flashing. Ensure the fibre cement cladding will not sit in ponding water and the flashing is installed in an acceptable method to prevent water running up behind the sheeting to ingress into framing. Refer to Figure 3.

2.3.1.3 Vapour permeable sarking

Vapour permeable sarking must be installed under James Hardie external cladding.

Wall construction design must effectively manage moisture, accounting for both the interior and exterior environments of the building, particularly in buildings that have a higher risk of wind driven rain penetration or are artificially heated or cooled. In cold climates where condensation of interior moisture is a concern, a vapour retarder on the interior side of framing, in addition to the wall cavity insulation and vapour permeable sarking on the exterior side of the framing, is recommended. Vapour barrier permeable plastic films on the interior side of framing should be avoided unless specified by design professionals. Refer to the manufacturers for the correct use and installation of vapour permeable sarking, building membranes and underlays.

2.3.2 Sealant jointing

Sealant jointing can be used to joint sheets, weatherboards and planks.

When filling joints with sealant, cut the nozzle of the cartridge to suit the specified gap between the sheets, weatherboards and planks. Mask the edges with easily removable masking tape. Then apply the sealant in an upward motion, pushing the sealant into the gap to fill it. Carry this operation out slowly to ensure the sealant completely fills the gap and bonds to the edges of the cladding. Run a spatula over the joint, carefully wiping away the excess sealant. Carefully remove the masking tape immediately after you complete the sealant application.

NOTE

Do not use a mix of sealant types to fill joints. Use of James Hardie polyurethane joint sealant is recommended.

2.3.3 Painting

Contact paint manufacturers for specific advice on paint systems that are compatible with the fibre cement claddings outlined in this manual.

James Hardie external cladding must be painted within 90 days of installation.

James Hardie does not recommend tiling in an external application.

NOTE

When painting PVC accessories, ensure the paint has a Light Reflective Value (LRV) greater than 40%. Refer to the texture coat manufacturer for the paint's LRV.

2.3.4 Ground clearances

Install James Hardie external cladding with a minimum 150mm clearance to the earth on the exterior of the building as shown in Figure 4 or in accordance with local building codes if greater than 150mm is required. Maintain a minimum 50mm clearance between James Hardie external cladding and roofs, decks, paths, steps and driveways.

Adjacent finished grade must slope away from the building in accordance with local building codes, typically a minimum slope of 50mm minimum over the first metre.

Do not install external cladding such that it may remain in contact with standing water.

NOTE

Greater clearance may be required in order to comply with termite protection provisions, see Clause 2.3.5.

2.3.5 Termite protection

The BCA specifies the requirements for termite barriers and must be complied with. Where the exposed slab edge is used as part of the termite barrier system, a minimum of 75mm of the exposed slab edge must be visible to permit ready detection of termite entry.

3 SHEET CLADDING

3.1 GENERAL

For general information on framing, fixing and installation refer to Section 2.

To determine which accessories are required, refer to Section 8.

For flashing, sarking and rising damp requirements refer to Clause 2.3.

Unless otherwise noted, details in this section apply to both HardiFlex sheets and PanelClad sheets.

Fix sheets to studs and top and bottom plates with nails or screws.

3.2 BRACING

HardiFlex and PanelClad sheets can also be used as structural bracing. Refer to the James Hardie Bracing Manual or for further information Ask James Hardie™ on 13 11 03.

NOTE

4.5mm thick HardiFlex sheets must not be used as bracing.

3.3 FIXING

3.3.1 General

The minimum thickness of studs at HardiFlex and PanelClad sheet joints must be 42mm for timber and 38mm for steel.

Where a stud is less than the required minimum thickness under a joint, sufficient landing must be provided by planting an additional stud or continuous packer to the side of the stud affected.

Where sheets are not used as sheet bracing, locate fasteners at centres given in Table 2, around the perimeter, and on the intermediate stud.

Fasteners must not be less than 12mm from sheet edges and 50mm from corners. Refer to Figure 5.

3.3.2 Timber

When hand nailing - use 2.8 x 30mm fibre cement nails for fixing 4.5mm and 6mm thick HardiFlex and PanelClad sheets.

3.3.3 Steel

For steel framing of thickness 0.55mm to 0.75mm BMT - use 20mm Buildex FibreTEKS self drilling screws.

For steel framing of thickness 0.80mm to 1.6mm BMT - use 8g - 32mm HardiDrive® grey external grade screws.

NOTE

Self embedding head screws must not be used in 4.5mm thick sheets.

TABLE 2

MAXIMUM STUD AND FASTENER SPACING FOR HARDIFLEX AND PANELCLAD SHEETS FOR WIND CATEGORIES

TO AS4055-1992								
	non-cyclonic	N1	N2	N3		N4	N5	N6
	cyclonic				C1	C2	C3	C4
TO QLD BUILDING STANDARDS								
	non-clyclonic	W28N	W33N	W41N		W50N	W60N	W70N
	cyclonic				W41C	W50C	W60C	W70C
6mm HARDIFLEX AND PANELCLAD SHEETS								
max. studs spacing	within 1200mm of building edge	600	600	600	450	450	300	300
	intermediate	600	600	600	450	450	450	300
max. fasteners spacing	within 1200mm of building edge: intermediate	300	200	200	200	150	150	100
	within 1200mm of building edge: sheet edges	200	200	200	200	150	150	100
	elsewhere intermediate	300	300	200	200	200	200	200
	elsewhere sheet edges	200	200	200	200	200	200	200
4.5mm HARDIFLEX SHEETS								
max. studs spacing	within 1200mm of building edge	450	450	450	300	300	N/A	N/A
	elsewhere	450	450	450	450	300	N/A	N/A
max. fasteners spacing	within 1200mm of building edge: intermediate	300	200	200	200	150	N/A	N/A
	within 1200mm of building edge: sheet edges	200	200	200	200	150	N/A	N/A
	elsewhere intermediate	300	300	200	200	200	N/A	N/A
	elsewhere sheet edges	200	200	200	200	200	N/A	N/A

3.4 INSTALLATION

For framing and general fixing layout refer to Figure 5.

We recommend you fix from the centre of the sheet and work outwards to ensure sheets are hard against the frame. This avoids drumminess.

NOTE

When installing PanelClad Stucco sheets, ensure sheets are installed so the render pattern faces upwards.

3.5 JOINTING AND CORNERS

3.5.1 General

A number of options are available for jointing sheets and corners.

3.5.2 Vertical joints

For vertical joints, a timber batten can be planted over the abutting panels. Refer to Figure 6.

Alternatively, use a PVC straight jointer for HardiFlex sheets and PanelClad Stucco sheets. Refer to Figure 7.

Refer to Clause 2.3.2 for more information on sealant jointing.

When joining PanelClad TextureLine sheets, use the special TextureLine PVC straight joint. Refer to Figure 8.

HardiFlex and PanelClad Stucco sheets can also be jointed by placing a bond breaker tape to jointing studs and fixing panels to studs leaving a minimum 3mm gap between edges and filling with James Hardie joint sealant.

3.5.3 Horizontal joints

For horizontal joints, use a PVC drip strip for 4.5mm thick HardiFlex sheets. Refer to Figure 9.

Alternatively, for 6mm thick sheets use a PVC flashing mould. Refer to Figure 10.

Horizontal moulds must be supported by noggings and fixed at 200mm centres.

PanelClad TextureLine sheets are not recommended to be installed on top of each other without using a durable horizontal batten over the two sheets eg Linea weatherboard trim. The batten must be allowed to float over the joint and must be attached to the top sheet only. Ensure no moisture can enter behind the batten from the top, for more information contact Ask James Hardie™ on 13 11 03.

3.5.4 Corners

Timber battens can be used. For finishing internal or external corners refer to Figure 11 and Figure 12.

Alternatively, PVC corners can be used to form internal or external corners. Refer to Figure 13 and Figure 14.

A further option for either internal or external corners is to use a PVC 45 x 45mm cellular corner mould. This accessory should be fixed through alternative opposite legs at 200 centres. Refer to Figure 15.

4 PRIMELINE WEATHERBOARDS

4.1 GENERAL

For general information on framing, fixing and installation refer to Section 2. For details see Section 9.

To determine which accessories are required, refer to Section 8.

For flashing, sarking and rising damp requirements refer to Clause 2.3.

Fasten internal and external corner accessories to the frame before starter strips and planks are installed. If using the two piece snap on corner, ensure corner studs are straight prior to installation.

NOTE

1. If using snap on corner, do not fit pieces together until all cladding is installed and final attachment to wall is required. For further information on snap on corners, refer to Clause 9.2.1.
2. When a starter strip and lead flashing is used, run sarking over lead flashing between flashing and starter strip. Cut sarking just below starter strip.

4.2 HERITAGE AND CHAMFER PROFILE

4.2.1 General

These profiles sit flat against the framing, eliminating the traditional displacement of the bottom of the weatherboards by the top of the previously fixed weatherboard.

4.2.2 Bracing

PrimeLine Heritage and Chamfer weatherboards can be used in bracing applications. Refer to the Structural bracing Design Manual.

4.2.3 Fixing

4.2.3.1 General

Where cladding is not used as bracing, locate studs at centres given in Table 3, then fasten to each stud. Fasteners must not be less than 20mm from weatherboard edges and must be pre-drilled.

For nail spacings and lap, refer to Figure 16.

NOTE

For N4/C2, N5/C3 or N6/C4 wind categories, two rows of fixings are required. Refer to Figure 17 for location of rows of fixings.

4.2.3.2 Timber

When hand nailing - use 2.8 x 40mm fibre cement nails for fixing PrimeLine Heritage and Chamfer weatherboards.

4.2.3.3 Steel

For steel framing of thickness 0.55mm to 0.75mm BMT - use 30mm Buildex FibreTEKS self drilling screws.

For steel framing of thickness 0.80mm to 1.6mm - use 8g - 32mm HardiDrive® grey external grade screws.

4.2.4 Installation

Install PrimeLine Heritage and Chamfer weatherboards as follows:

Step 1

Using a spirit or water level, establish the lowest point of the cladding around the perimeter. Then use a level string or flick line across the face of the studs to establish a level that coincides with the top of the first Heritage and Chamfer weatherboard bottom row from this lowest point.

Step 2

Fix the top of the first (bottom) row against the string line, with one weatherboard end flush with an external corner accessory. Fasten the profile with one row of fixings. Refer to Figure 16.

Step 3

If using on-stud joining of PrimeLine Heritage and Chamfer weatherboards, refer to Clause 4.3.4.2. If using off stud joining of PrimeLine Heritage and Chamfer weatherboards, fit Uniclip accessory to the free end of the first weatherboard and continue fitting bottom row using Uniclips at joints between lengths of weatherboards. Refer to Clause 4.3.4.3.

Step 4

After completing the first row, install the next row and subsequent rows, sitting the bottom recess over the top of the previous row. This will help provide the required overlap of 18mm.

4.2.5 Jointing

4.2.5.1 General

On-stud jointing can give a tidier result than off-stud jointing. In addition, since the joint is fully supported by the backing stud, the joint is more resistant to impact loading and the board ends to displacement. The sealant joint filler will also be more resistant to cracking and failure.

To maximise the strength, integrity and good looks of a wall, butt joints between weatherboards in an area of wall must be staggered over two or more stud lines (ie do not locate joints in the same vertical line).

TABLE 3

MAXIMUM SPACING FOR PRIMELINE HERITAGE AND CHAMFER WEATHERBOARDS FOR WIND CATEGORIES								
TO AS4055-1992								
	non-cyclonic	N1	N2	N3		N4	N5	N6
	cyclonic				C1	C2	C3	C4
TO QLD BUILDING STANDARDS								
	non-clyclonic	W28N	W33N	W41N		W50N	W60N	W70N
	cyclonic				W41C	W50C	W60C	W70C
PRIMELINE WEATHERBOARDS HERITAGE AND CHAMFER								
max. studs spacing	within 1200mm of building edge	600	600	600	450	450	300	300
	elsewhere	600	600	600	450	450	450	450

4.2.5.2 On stud jointing

Step 1

Ensure the ends of weatherboards are square and smooth. Use factory cut ends where possible.

Step 2

Pack out stud with timber off cut for fixing end of plank.

Step 3

Pre-drill holes 20mm from end of weatherboards.

Step 4

Fix weatherboards leaving a 3mm gap ready to receive sealant. Refer to Clause 2.3.1.5 for sealant jointing details. Alternatively, butt them together without sealant.

4.2.5.3 Off-stud jointing (with Uniclip)

NOTE

Off-stud jointing of PrimeLine Heritage and Chamfer weatherboards using Uniclips is not recommended in coastal areas (refer to Clause 2.2.2 for definition of coastal areas). As this accessory may corrode in these areas, only join the PrimeLine Heritage and Chamfer weatherboards profile on-stud.

For concealed off-stud jointing of weatherboards in non-coastal areas, Uniclips are recommended. Install Uniclips as follows:

Step 1: Ends of weatherboards must be cut square and smooth. Use factory cut ends where possible.

Step 2: Slip the Uniclip over the end of the weatherboard, ensuring it fits hard up against the weatherboard end. Refer to Figure 18. Then nail weatherboard to studs.

Step 3: Fasten the next weatherboard in position, ensuring the lower edges of the abutting weatherboards are aligned and the end of the weatherboard is hard up against the stop in the Uniclip. A 3mm gap must be formed using the stops for later sealing with sealant.

Step 4: Sealing

Fill the joint with sealant. Refer to Clause 2.3.2 Sealant jointing.

4.3 SUMMIT AND NEWPORT PROFILES

4.3.1 General

These profiles use the concealed HardiLock fixing system that secures the bottom of the overlapping weatherboard over the top of the previously installed board, doing away with the need for a visible penetrating fastener.

4.3.2 Bracing

PrimeLine Summit and Newport weatherboards cannot be used for bracing applications.

4.3.3 Fixing

4.3.3.1 General

Where cladding is not used as bracing, locate studs at centres given in Table 4 then fasten to each stud. Fasteners must not be less than 20mm from weatherboard edges and must be pre-drilled.

4.3.3.2 Timber

When hand nailing - use 2.8 x 40mm fibre cement nails for fixing PrimeLine Summit and Newport weatherboards.

4.3.3.3 Steel

For steel framing of thickness 0.55mm to 0.75mm BMT - use 30mm FibreTEKS self drilling screws.

For steel framing of thickness 0.80mm to 1.6mm BMT - use 8g - 32mm HardiDrive® grey external grade screws.

4.3.4 Installation

Install PrimeLine Summit and Newport weatherboards as follows:

Step 1

The lowest board for each wall is to be installed first. Use a spirit or water level to establish a level line around the frame, with the lower edge of the first (bottom) board approximately 13/21mm below the floor bearer depending on the profile selected. Refer to Figure 21.

Step 2

Pack this first board out with a James Hardie starter strip. Refer to Figure 21. The starter strip is fastened to blocking between the bearers at 600mm centres. Alternatively, use a shaped 9mm thick primed timber starter strip ready to accept and correctly position the first HardiLock spline.

Step 3

Fit the board in position and fasten it to each stud. For fastener locations refer to Figure 19 for Summit profile and Figure 20 for Newport profile.

Step 4

Use the spline on each board in subsequent rows to position and align each board with the board below. The spline will provide the correct lap.

Check the top level of the boards every fourth board to ensure they are correctly levelled and spaced.

Do not apply excess downward pressure to fit the spline.

TABLE 4

MAXIMUM STUD SPACING FOR PRIMELINE SUMMIT AND NEWPORT WEATHERBOARDS FOR WIND CATEGORIES

Profiles	non-cyclonic	N1	N2	N3		N4	N5	N6
	cyclonic				C1	C2	C3	C4
PRIMELINE SUMMIT AND NEWPORT								
	within 1200mm of building edge	600	600	600	450	450	300	300
	general wall areas	600	600	600	450	450	450	450

4.3.5 Jointing

4.3.5.1 General

On-stud jointing can give a tidier result than off-stud jointing. In addition, since the joint is fully supported by the backing stud, the joint is more resistant to impact loading and the board ends to displacement. The sealant joint filler will also be more resistant to cracking and failure.

To maximise the strength, integrity and good looks of a wall, butt joints between weatherboards in an area of wall should be staggered over two or more stud lines (ie do not locate joints in the same vertical line).

4.3.5.2 On-stud jointing

Step 1: Ensure ends of weatherboards are square and smooth. Use factory cut ends where possible.

Step 2: Pack out stud with timber off cut for fixing end of weatherboard.

Step 3: Pre-drill holes 20mm from the end of weatherboards.

Step 4: Slide the spline so that it fits into the back of the adjoining board by approximately 100mm.

Step 5: Fix weatherboards to studs leaving a 3mm gap ready if sealant is to be used. Refer to Clause 2.3.2 for sealant jointing details. Alternatively, butt them together without sealant.

4.3.5.3 Off-stud jointing

For concealed off-stud jointing of Summit and Newport install as follows:

Step 1: Cut the weatherboards so the joint occurs at any point between studs. Use factory cut ends where possible.

Step 2: Follow Step 4 and 5 of on-stud jointing.

The HardiLock splines will provide sufficient support locking the top and bottom of the weatherboards, eliminating the need for any additional support framing. Refer to Figure 22.

5 HARDIPLANK CLADDING

5.1 GENERAL

For general information on framing, fixing and installation refer to Section 2. For details see Section 9.

To determine which accessories are required, refer to Section 8.

For flashing, sarking and rising damp requirements refer to Clause 2.3.

Fasten internal and external corner accessories to the frame before foot mould and planks are installed.

NOTE

If using snap on corner, do not fit pieces together until all cladding is installed and final attachment to wall is required. For further information on snap on corners refer to Clause 9.2.1.

5.2 BRACING

HardiPlank cladding can also be used as structural bracing. Refer to the Structural bracing Design Manual or, for further information, Ask James Hardie™ on 13 11 03.

NOTE

Shingled siding must not be used as bracing.

5.3 FIXING

5.3.1 General

Where cladding is not used as bracing, locate studs at centres given in Table 5, then fasten HardiPlank cladding to each stud.

Fasteners must not be less than 20mm in from plank ends and must be pre-drilled.

For nail spacings and lap for HardiPlank cladding profiles, refer to Figure 23.

If fixing Shingled Siding, profiles must be lapped a minimum of 50mm.

5.3.2 Timber

When hand nailing - use 2.8 x 40mm fibre cement nails for fixing Smooth, Woodgrain, Rusticated and Old Style HardiPlank cladding and Shingled Siding.

5.3.3 Steel

For steel framing of thickness 0.55mm to 0.75mm BMT - use 30mm Buildex FibreTEKS self drilling screws.

For steel framing of thickness 0.80mm to 1.6mm BMT - use 8g - 32mm HardiDrive® grey external grade screws.

For metal framing, screw fix above the lap through the top plank only. Refer to Figure 24.

Alternatively, HardiPlank galv stud clips can be used on metal framing. Stud clips are positioned along the top of the planks then fixed directly through the top leg of the clip with external grade #10 - 1.6x16mm hex head, drill point screws, automatically setting the lap at 25mm. Refer to Figure 25.

NOTE

HardiPlank galv stud clips are not recommended in coastal areas (refer to Clause 2.2.2 for definition of coastal areas). This accessory may corrode in these areas.

NOTE

For wind load categories C2, C3 and C4, stud clips must not be used.

TABLE 5

MAXIMUM STUD SPACING FOR HARDIPLANK CLADDING FOR WIND CATEGORIES								
TO AS4055-1992								
	non-cyclonic	N1	N2	N3		N4	N5	N6
	cyclonic				C1	C2	C3	C4
TO QLD BUILDING STANDARDS								
	non-clyclonic	W28N	W33N	W41N		W50N	W60N	W70N
	cyclonic				W41C	W50C	W60C	W70C
HARDIPLANK CLADDING (UP TO 230 WIDE)								
max. stud spacing	within 1200mm of building edge	600	600	600	450	450	300	300
	elsewhere	600	600	600	450	450	450	450
HARDIPLANK CLADDING (300 WIDTH ONLY)								
max. stud spacing	within 1200mm of building edge	600	600	600	450	N/A	N/A	N/A
	elsewhere	600	600	600	450	N/A	N/A	N/A

5.4 INSTALLATION

5.4.1 Installation procedure for HardiPlank cladding and Shingled Siding profiles

Step 1
Using a spirit or water level, establish a level line around lower perimeter of the frame and fix the HardiPlank footmould. Refer to Figure 23.

Step 2
Start the first plank against the HardiPlank 7.5mm zincalume footmould, flush with an external corner. Fasten the plank to the frame through the strip. Ensure that the holding clips on the HardiPlank 7.5mm zincalume footmould are opened out prior to fitting the first board.

Step 3
If off-stud jointing is to be used, fit either metal soaker (refer to Clause 5.5.3) or jointing strip (refer to Clause 5.5.4) to the free end of the first plank, and continue fitting the bottom course of planks.

Step 4
After completing the first course, position subsequent courses using a storey rod or lap gauge to obtain the required lap, staggering the joints as you go.

5.5 JOINTING

5.5.1 General

Generally, on-stud jointing can give a tidier result than off-stud jointing. In addition, since the joint is fully supported by the backing stud, the joint is more resistant to impact loading and the board ends to displacement. The sealant joint filler will be more resistant to cracking and failure.

To maximise the wall strength, integrity and good looks of a wall, butt joints between weatherboards in an area of wall should be staggered over two or more stud lines (ie. avoid joints located directly in the same vertical line).

5.5.2 On-stud jointing

Step 1
Ensure ends of planks are square and smooth. Use factory cut ends where possible.

Step 2
Pack out stud with timber off cut for fixing end of plank.

Step 3
Pre-drill holes 20mm from end of planks.

Step 4
Fix planks leaving a 3mm gap if sealant is to be used or butt them together without sealant. Refer to Clause 2.3.2 for sealant jointing details.

5.5.3 Off-stud jointing (with metal soakers)

For concealed off-stud jointing of planks, metal soakers are recommended. Select a soaker sized to suit the required 205, 230 or 300mm wide profile.

NOTES

1. Metal soakers are not available for Shingled Siding.
2. Metal soakers are not recommended in coastal areas (refer to Clause 2.2.2 for definition of coastal areas) as this accessory may corrode in these areas.
3. For an alternative method of fixing planks that is recommended in coastal areas, refer to Clause 5.5.4.

Install metal soakers as follows:

Step 1
Ends of planks must be cut square and smooth. Use factory cut ends where possible.

Step 2
At the bottom row of planks only, cut off the lower flanges of the soaker with tin snips before use. Slip the metal soaker over the end of the plank, ensuring it fits hard up against the plank end. Fasten plank to studs. Refer to Figure 26.

Step 3
Fasten the next plank in position, ensuring that the lower edge of abutting planks are aligned and the end of each plank is hard up against the stop in the metal soakers. The stop helps form a 3mm gap that must be filled with sealant.

Step 4
Fill the gap with sealant. Refer to Clause 2.3.2 for sealant jointing details.

Step 5
With subsequent rows of planks, ensure the lower prongs of the metal soakers are firmly located over the top of the previous row.

5.5.4 Off-stud jointing (alternative detail)

For HardiPlank Woodgrain and Smooth cladding profiles, PVC jointing strips can be used.

For Smooth profile, use PVC Smooth jointer. Refer to Figure 27.
For Woodgrain profile, use PVC Woodgrain jointer.
For Shingled Siding, select Shingled Siding jointing strip.
Refer to Figure 28.

6 SAFE WORKING PRACTICES

WARNING - DO NOT BREATHE DUST AND CUT ONLY IN WELL VENTILATED AREA

James Hardie products contain sand, a source of respirable crystalline silica which is considered by some international authorities to be a cause of cancer from some occupational sources. Breathing excessive amounts of respirable silica dust can also cause a disabling and potentially fatal lung disease called silicosis, and has been linked with other diseases. Some studies suggest smoking may increase these risks. During installation or handling: (1) work in outdoor areas with ample ventilation; (2) minimise dust when cutting by using either 'score and snap' knife, fibre cement shears or, where not feasible, use a HardiBlade® saw blade and dust-reducing circular saw attached to a HEPA vacuum; (3) warn others in the immediate area to avoid breathing dust; (4) wear a properly-fitted, approved dust mask or respirator (e.g. P1 or P2) in accordance with applicable government regulations and manufacturer instructions to further limit respirable silica exposures. During clean-up, use HEPA vacuums or wet cleanup methods - never dry sweep. For further information, refer to our installation instructions and Material Safety Data Sheets available at www.jameshardie.com.au. FAILURE TO ADHERE TO OUR WARNINGS, MATERIAL SAFETY DATA SHEETS, AND INSTALLATION INSTRUCTIONS MAY LEAD TO SERIOUS PERSONAL INJURY OR DEATH.

JAMES HARDIE RECOMMENDED SAFE WORKING PRACTICES

CUTTING OUTDOORS

1. Position cutting station so wind will blow dust away from the user or others in working area.
2. Use one of the following methods based on the required cutting rate:

   Best
   - Score and snap
   - Hand guillotine
   - Fibreshear

   Good
   - Dust reducing circular saw equipped with HardiBlade® saw blade and HEPA vacuum extraction.

CUTTING INDOORS

- Cut only using score and snap, hand guillotine or fibreshears (manual, electric or pneumatic).
- Position cutting station in a well-ventilated area.

DRILLING/OTHER MACHINING

When drilling or machining you should always wear a P1 or P2 dust mask and warn others in the immediate area.

IMPORTANT NOTES

1. For maximum protection (lowest respirable dust production), James Hardie recommends always using "Best" - level cutting methods where feasible.
2. NEVER use a power saw indoors.
3. NEVER use a circular saw blade that does not carry the HardiBlade® logo.
4. NEVER dry sweep - Use wet suppression or HEPA vacuum.
5. NEVER use grinders.
6. ALWAYS follow tool manufacturers' safety recommendations.

P1 or P2 respirators should be used in conjunction with above cutting practices to further reduce dust exposures. Additional exposure information is available at www.jameshardie.com.au to help you determine the most appropriate cutting method for your job requirements. If concern still exists about exposure levels or you do not comply with the above practices, you should always consult a qualified industrial hygienist or contact James Hardie for further information.

WORKING INSTRUCTIONS

Refer to recommended safe working practices before starting any cutting or machining of product.

Score and snap

Score and snap is a fast and efficient method of cutting James Hardie building products using James Hardie's special tungsten tipped score and snap knife.

Preferably score on the face side of the product. Score against a straight edge and repeat the action to obtain adequate depth for clean break – normally one third of sheet thickness. Snap upwards to achieve break. Smooth any rough edges with a rasp.

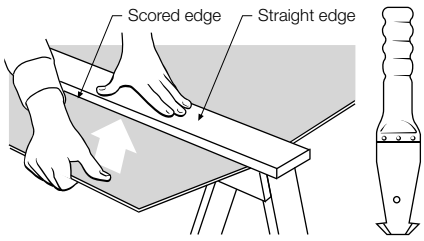

Hand guillotine

Make guillotine cut on the off-cut side of line to allow for the thickness of the blade.

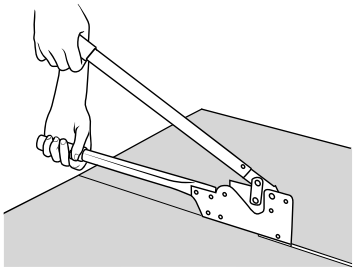

Fibreshear

An electrically powered, fast, clean and effortless way of cutting James Hardie building products, especially around curves such as archways. Make fibreshear cut on the off-cut side of the line to allow for the thickness of the shear.

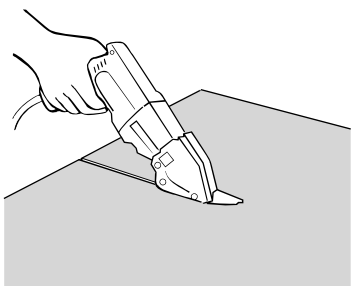

HardiBlade® saw blade
The HardiBlade® saw blade used with a dust-reducing saw and HEPA vacuum extraction allows for fast, clean cutting of James Hardie fibre cement products. A dust-reducing saw uses a dust deflector or a dust collector which can be connected to a vacuum system. When sawing, clamp a straight-edge to the sheet as a guide and run the saw base plate along the straight edge when making the cut.

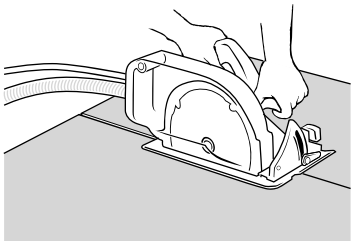

HOLE-FORMING

For smooth clean cut circular holes:
- Mark the centre of the hole on the sheet.
- Pre-drill a pilot hole.
- Using the pilot hole as a guide, cut the hole to the appropriate diameter with a hole saw fitted to a heavy duty electric drill.

For irregular holes:
- Small rectangular or circular holes can be cut by drilling a series of small holes around the perimeter of the hole then tapping out the waste piece from the sheet face.
- Tap carefully to avoid damage to sheets, ensuring the sheet edges are properly supported.

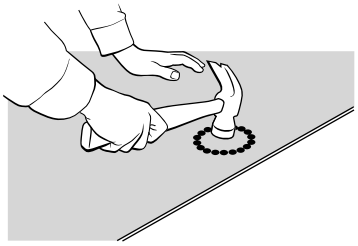

STORAGE AND HANDLING

To avoid damage, all James Hardie building products should be stored with edges and corners of the sheets protected from chipping.

James Hardie building products must be installed in a dry state and be protected from rain during transport and storage. The product must be laid flat under cover on a smooth level surface clear of the ground to avoid exposure to water, moisture, etc.

QUALITY

James Hardie conducts stringent quality checks to ensure any product manufactured falls within our quality spectrum. It is the responsibility of the builder to ensure the product meets aesthetic requirements before installation. James Hardie will not be responsible for rectifying obvious aesthetic surface variations following installation.

7 PRODUCT INFORMATION

7.1 GENERAL

PrimeLine weatherboards, HardiPlank cladding, PanelClad sheets and HardiFlex sheets (JH external cladding) are cellulose fibre reinforced cement building products. The basic composition is Portland cement, ground sand, cellulose fibre and water.

JH external cladding is manufactured to AS/NZS 2908.2 'Cellulose-Cement Products Part 2: Flat Sheets' (ISO 8336 'Fibre Cement Flat Sheets').

JH external cladding is classified Type A, Category 2 in accordance with AS/NZS 2908.2 'Cellulose-Cement Products'.

For Material Safety Data Sheets (MSDS) visit www.jameshardie.com.au or Ask James Hardie™ on 13 11 03.

7.2 PRODUCT MASS

Refer to Section 8.1 for the approximate mass at equilibrium moisture content for PrimeLine weatherboards, HardiPlank cladding, PanelClad sheets and HardiFlex sheets.

7.3 DURABILITY

7.3.1 Resistance to moisture/rotting
JH external cladding has demonstrated resistance to permanent moisture induced deterioration (rotting) by passing the following tests in accordance with AS/NZS 2908.2:

- Water permeability (Clause 8.2.2)
- Warm water (Clause 8.2.4)
- Heat rain (Clause 6.5)
- Soak dry (Clause 8.2.5)

7.3.2 Resistance to fire
JH external cladding is deemed to be non-combustible in accordance with C1.12 of the Building Code of Australia.

JH external cladding has been tested by CSIRO and is classified as a Group 1 material in accordance with Specification C1.10a of the BCA.

JH external cladding has the following early fire hazard Indices (tested to AS 1530 Part 3).

EARLY FIRE HAZARD INDICES (TESTED TO AS1530) PART 3	
Ignition index	0
Flame spread index	0
Heat evolved index	0
Smoke developed index	0 - 1

7.3.3 Resistance to termite attack
Based on testing completed by CSIRO Division of Forest Products Report Numbers FP349 and FP274 James Hardie fibre cement has demonstrated resistance to termite attack.

7.4 ALPINE REGIONS

In regions subject to freeze/thaw conditions, fibre cement external cladding must be painted. In addition, fibre cement cladding must not be in direct contact with snow and/or ice build up for extended periods, e.g. external walls in alpine regions subject to snow drifts over winter.

Tested for resistance to frost in accordance with AS/NZS 2908.2 Clause 8.2.3.

8 COMPONENTS

8.1 SHEET CLADDING

HARDIFLEX SHEETS

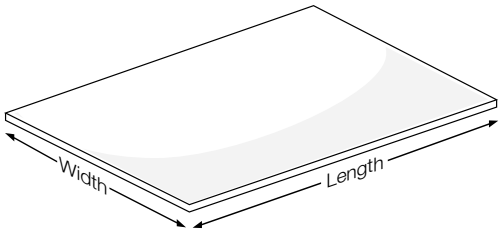

NOTE
Sheets fixed using self embedding head (SEH) screws must be 6mm thick as embedment of the fastener head in 4.5mm sheets reduces wind loading capacity.

Mass: 4.5mm = 6.0kg/m² 6mm = 8.1kg/m²

SURFACE TEXTURE	SMOOTH TEXTURE	
Length (mm)	Width (mm)	Thickness (mm):
1800	900 1200	4.5 4.5/6.0
2100	1200	4.5
2400	900 1200	4.5/6.0 4.5/6.0
2700	900 1200	4.5 4.5/6.0
3000	900 1200	4.5 4.5/6.0

PANELCLAD SHEETS

STUCCO

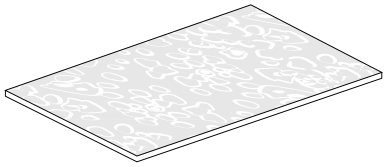

Surface texture:	Heavily textured cement render.
Lengths:	2440mm; 3000mm
Width:	1200mm
Thickness:	6.0mm
Mass:	8.1kg/m²

TEXTURELINE COLOUR BROWN

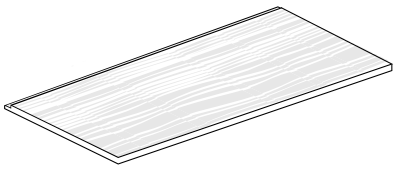

Surface texture:	Band sawn timber with regular smooth groove.
Lengths:	2440mm; 2700mm
Width:	1198mm
Thickness:	6.0mm
Mass:	8.1kg/m²

SHEET CLADDING ACCESSORIES

			PANELCLAD SHEETS		HARDIFLEX SHEETS	
			Stucco	TextureLine	4.5mm*	6mm
	HardiDrive® screw 32mm long Class 3 galvanised screw for concealed fixing to 0.80 - 1.6mm BMT steel framing		■	■		■
	JH 6mm PVC flashing For multicourse fixing	6mm 3000mm	■	■		■
	JH PVC straight jointer Plastic jointing strip	4.5 - 2400mm			■	
	For HardiFlex sheets	6.0 - 2700mm				■
		4.5 - 3000mm			■	
	For Stucco and HardiFlex sheets	6.0 - 3000mm	■			■
	HardiTex 7.5mm PVC Z flashing For horizontal jointing of 4.5mm sheets	2400mm length			■	
	JH PVC external corner Mould for joining sheets at external corners	4.5 - 3000mm			■	
		6.0 - 3000mm	■	■		■
	JH PVC internal corner Mould for joining sheets at internal corners	4.5 - 3000mm			■	
		6.0 - 3000mm	■	■		■
	JH 45x45 PVC cellular corner mould For finishing internal and external corners	3000mm length	■	■	■	■
	JH PVC cap mould Finishes sheet edges	4.5 - 2400mm			■	
		6.0 - 3000mm	■	■		■
	TextureLine 6mm PVC jointer Colour matched brown. Plastic jointing strip suitable for TextureLine	2700mm length		■		
	JH score and snap knife Tugsten tipped scoring tool for easy cutting		■	■	■	■
	Fibreshear Electric cutting tool		■	■	■	■
	HardiBlade® saw blade ø185mm poly diamond blade, for fast, clean cutting of James Hardie fibre cement		■	■	■	■

COMPONENTS NOT SUPPLIED BY JAMES HARDIE

James Hardie recommends the following products be used in conjunction with its external cladding products. James Hardie does not supply these products and does not provide a warranty for their use. Please contact component manufacturers for information on their warranties and further information on their products.

	Fibre cement nails Galvanised nail 2.8 x 30mm	■	■	■	■
	Buildex FibreTEKS® 20mm for 0.55mm to 0.75mm BMT ® denotes a registered mark of Buildex	■	■		■
	Buildex FibreTEKS bugle head 20mm for 0.55mm to 0.75mm BMT			■	
	Vapour permeable sarking	■	■	■	■

* Not suitable for use with SEH screws as fastener head embedment reduces wind load capacity.

8.2 PRIMELINE WEATHERBOARDS

PRIMELINE WEATHERBOARDS

CHAMFER

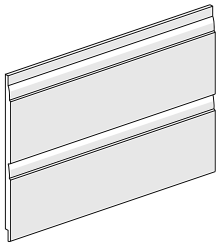

Surface texture:	Two-in-one milled profiles for narrow plank effect. Matt smooth.
Length:	4200mm
Width:	300mm
Thickness:	9.0mm
*Effective cover:	18mm overlap - 278mm
Mass:	3.6kg/lin.m

HERITAGE

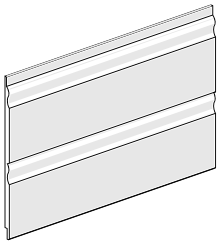

Surface texture:	Two-in-one milled profiles for narrow plank effect. Matt smooth.
Length:	4200mm
Width:	300mm
Thickness:	9.0mm
*Effective cover:	18mm overlap - 278mm
Mass:	3.6kg/lin.m

NEWPORT

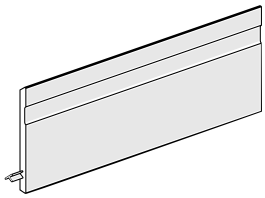

Surface texture:	Lap recess for shadow definition. Milled smooth finish.
Length:	4200mm
Width:	170mm
Thickness:	9.0mm
*Effective cover:	25mm overlap - 142mm
Mass:	2.1kg/lin.m

SUMMIT

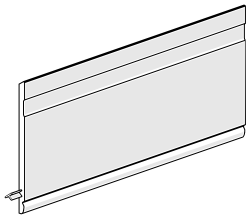

Surface texture:	Milled profile. Matt smooth.
Length:	4200mm
Width:	230mm
Thickness:	9.0mm
*Effective cover:	33mm overlap - 194mm
Mass:	2.8kg/lin.m

* Effective cover is based on maximum manufactured sheet widths. These values are provided for guidance only. Due to manufacturing tolerances it is recommended that actual cover is measured on site.

PRIMELINE WEATHERBOARDS ACCESSORIES

			Chamfer	Heritage	Summit	Newport
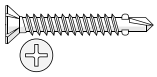	**HardiDrive® screw** 32mm long Class 3 galvanised screw for concealed fixing to 0.80 - 1.6mm BMT steel framing.		■	■	■	■
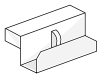	**PrimeLine galv universal off stud clip** Jointer for PrimeLine Heritage and Chamfer weatherboard.		■	■		
	JH 7.5mm PVC starter strip Secures bottom row or PrimeLine HardiLock at correct angle.	3000 length			■	■
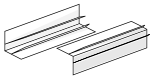	**PrimeLine aluminium snap on corner 2 part** For internal and external corners used to cover ends of cladding.	3000 length	■	■	■	■
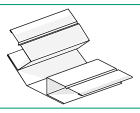	**PrimeLine galv variable corner** For wider than 90º angles, eg. bay windows.	2700mm length	■ 10mm	■ 10mm	■ 19mm	■ 19mm
	James Hardie joint sealant Fibre cement compatible polyurethane joint sealant. Replaceable nozzle. Easily paintable.	300ml cartridge	■	■	■	■
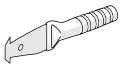	**JH score and snap knife** Tungsten tipped scoring tool for easy cutting.		■	■	■	■
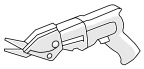	**Fibreshear** Electric cutting tool.		■	■	■	■
	HardiBlade® saw blade ø185mm poly diamond blade, for fast, clean cutting of James Hardie fibre cement.		■	■	■	■

COMPONENTS NOT SUPPLIED BY JAMES HARDIE

James Hardie recommends the following products be used in conjunction with its external cladding products. James Hardie does not supply these products and does not provide a warranty for their use. Please contact component manufacturers for information on their warranties and further information on their products.

	Fibre cement nails Galvanised nail 2.8 x 40mm	■	■	■	■
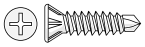	**Buildex FibreTEKS®** 30mm for 0.55mm to 0.75mm BMT Steel ® denotes a registered mark of Buildex	■	■	■	■
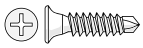	**Buildex FibreTEKS bugle head** 20mm for 0.55mm to 0.75mm BMT	■	■	■	■
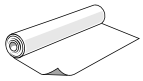	**Vapour permeable sarking**	■	■	■	■

8.3 HARDIPLANK CLADDING

HARDIPLANK CLADDING

OLD STYLE

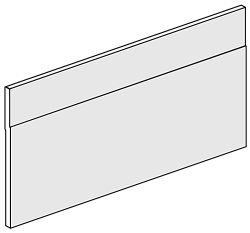

Surface texture:	Lap recess for shadow definition. Matt smooth
Length:	4200mm
Width:	205mm
Thickness:	7.5mm
*Effective cover:	25mm overlap - 180mm
Mass:	2.1kg/lin.m

RUSTICATED

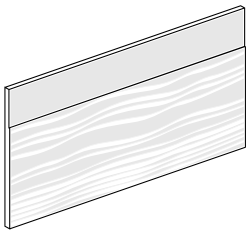

Surface texture:	Lap recess for shadow definition. Weathered rough sawn timber.
Length:	4200mm
Width:	205mm
Thickness:	7.5mm
*Effective cover:	25mm overlap - 180mm
Mass:	2.1kg/lin.m

SMOOTH

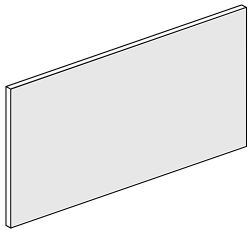

Surface texture:	Matt smooth.
Length:	4200mm
Width:	230mm; 300mm
Thickness:	7.5mm
*Effective cover:	For 230: 25mm overlap - 205mm For 300: 25mm overlap - 275mm
Mass:	For 230: 2.3kg/lin.m For 300: 3.0kg/lin.m

WOODGRAIN

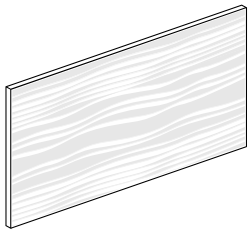

Surface texture:	Timber grained.
Length:	4200mm
Width:	230mm; 300mm
Thickness:	7.5mm
*Effective cover:	For 230: 25mm overlap - 205mm For 300: 25mm overlap - 275mm
Mass:	For 230: 2.3kg/lin.m For 300: 3.0kg/lin.m

SHINGLED SIDING

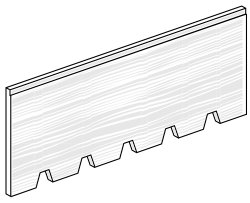

Surface texture:	Band sawn timber with regular smooth battens notched at regular intervals.
Length:	1198mm
Width:	240mm
Thickness:	6.0mm
*Effective cover:	50mm overlap - 190mm
Mass:	8.1kg/m^2

* Effective cover is based on maximum manufactured sheet widths. These values are provided for guidance only. Due to manufacturing tolerances it is recommended that actual cover is measured on site.

HARDIPLANK CLADDING ACCESSORIES

			Smooth	Woodgrain	Rusticated	Old Style	Shingled
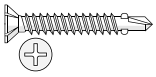	**HardiDrive® screw** 32mm long Class 3 galvanised screw for concealed fixing to 0.80 - 1.6mm BMT steel framing	40mm (also used if overcladding)	■	■	■	■	■
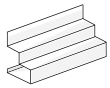	**HardiPlank 7.5mm zincalume footmould** zincalume starter strip for 7.5mm HardiPlank cladding. Kicks out bottom row of planks at correct angle.	3000mm length	■	■	■	■	
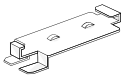	**HardiPlank galv soaker jointer** Concealed metal jointer (gives 25mm lap)	205mm			■	■	
		230mm	■	■			
		300mm	■	■			
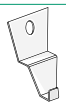	**HardiPlank galv stud clips** Automatically sets plank lap For 25mm lap	7.5mm	■	■	■	■	
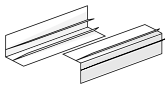	**PrimeLine aluminium snap on corner** For internal and external corners used to cover ends of cladding.	3000mm length	■	■	■	■	■
	HardiPlank aluminium external corner Finishes external corners and conceals edges.	230mm	■	■			
		300mm	■	■			
	HardiPlank aluminium internal corner Finishes internal corners and conceals edges.	230mm	■	■			
		300mm	■	■			
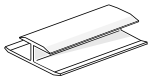	**HardiPlank smooth PVC jointer** Smooth plastic jointing strip	230mm	■				
		300mm	■				
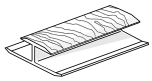	**HardiPlank Woodgrain PVC jointer** Textured plastic jointing strip.	230mm		■			
		300mm		■			
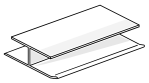	**HardiPlank Shingled Siding PVC jointer** Plastic jointing strip.						■
	James Hardie joint sealant Polyurethane joint sealant used with soakers and uniclip. Easily paintable.	300ml cartridge	■	■	■	■	
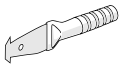	**JH score and snap knife** Tungsten tipped scoring tool for easy cutting.		■	■	■	■	■
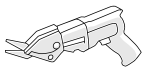	**Fibreshear** Electric cutting tool.		■	■	■	■	■
	HardiBlade® saw blade ø185mm poly diamond blade, for fast, clean cutting of James Hardie fibre cement.		■	■	■	■	■

HARDIPLANK CLADDING ACCESSORIES CONTINUED

COMPONENTS NOT SUPPLIED BY JAMES HARDIE

James Hardie recommends the following products be used in conjunction with its external cladding products. James Hardie does not supply these products and does not provide a warranty for their use. Please contact component manufacturers for information on their warranties and further information on their products.

		Smooth	Woodgrain	Rusticated	Old Style	Shingled
	Fibre cement nails Galvanised nail 2.8 x 40mm	■	■	■	■	■
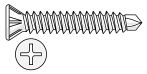	**Buildex FibreTEKS®** 30mm for 0.55mm to 0.75mm BMT Steel ® denotes a registered mark of Buildex	■	■	■	■	■
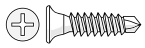	**Buildex FibreTEKS bugle head** 20mm for 0.55mm to 0.75mm BMT	■	■	■	■	■
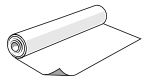	**Vapour permeable sarking**	■	■	■	■	■

9 DETAILS

9.1 GENERAL

This section contains general details relating to the use of James Hardie products in external cladding applications. These details are referenced throughout this specification.

9.2 HARDIPLANK CLADDING AND PRIMELINE WEATHERBOARD DETAILS

9.2.1 General

This section includes details for internal and external corners for HardiPlank cladding and PrimeLine weatherboard applications, window details, instructions for cutting around openings and details at eaves.

9.2.2 Internal and external corners

9.2.2.1 Snap on corners

Fix the inner sections of the two piece aluminium snap on accessory to the framing. Once all weatherboards or planks on both sides are fixed in place, snap the outer part of the accessory into place over the teeth of the first installed section. Refer to Figure 29 and Figure 30.

9.2.2.2 Timber stops

Alternatively, sawn timber stops can be used. Use a 25 x 25mm timber stop at internal corners. Refer to Figure 31 and Figure 32.

9.2.2.3 Aluminium corner for HardiPlank cladding profiles

A third option is available for HardiPlank cladding profiles using aluminium internal and external corners that are clipped on to the boards during installation. Refer to Figure 33 and Figure 34.

9.2.3 Window details

For trimming and flashing the ends of weatherboards or planks at window openings, you must observe similar principles used for sheet cladding. Refer to Figure 35, Figure 36 and Figure 37 for guidance on head, jamb and sill details respectively.

Refer to window manufacturer for appropriate installation and flashing details.

9.2.4 Cutting around openings

Where the width of a weatherboard or plank is reduced at openings, joints in weatherboards or planks must be provided as follows:

- For opening widths up to 1800mm - 1 joint minimum. Ideally, this should be located at a corner, but where joint lengths override this, the location of the joint can fall between the two corners. Refer to Figure 38.
- For opening widths over 1800mm - 1 joint at each corner.

9.2.5 Detail at eaves

When the weatherboards or planks do not finish at a full width to the underside of the eave, a suggested detail is to cut the weatherboard or plank to suit and cover with a timber batten. Refer to Figure 39.

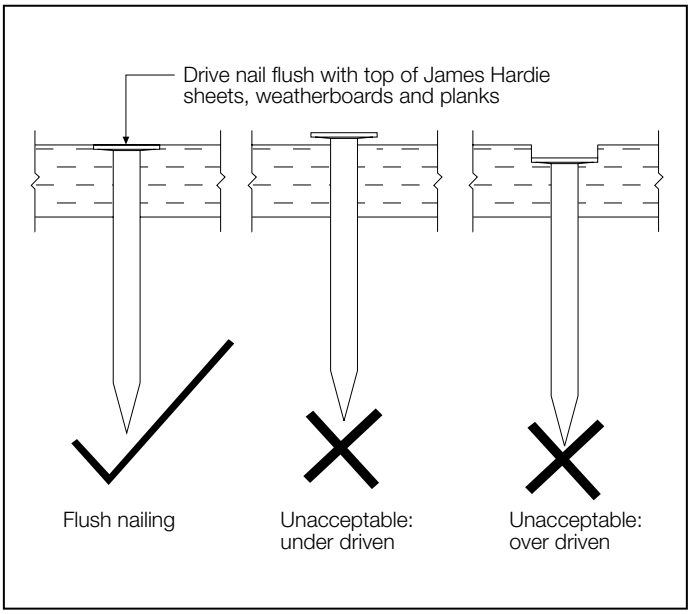

FIGURE 1 NAIL FASTENER DEPTH

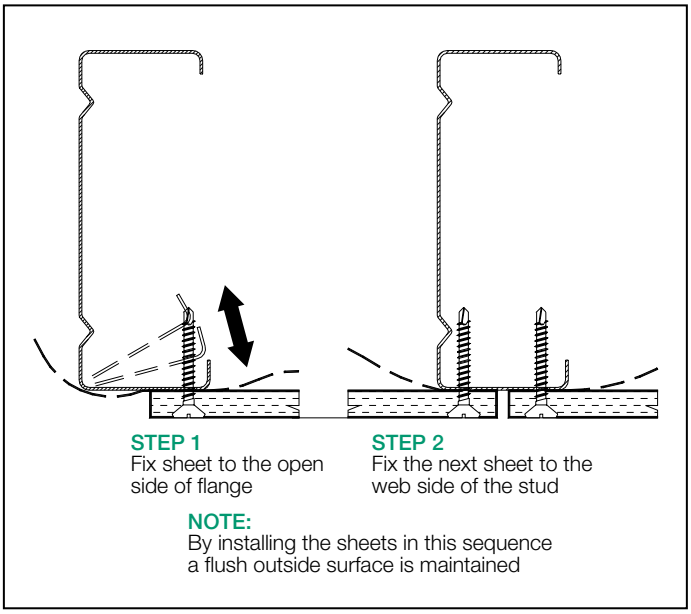

FIGURE 2 SCREW FASTENING

NOTE

1. Drive screws flush with top of James Hardie sheets, weatherboards and planks.
2. By installing the sheets in this sequence a flush outside surface is maintained.

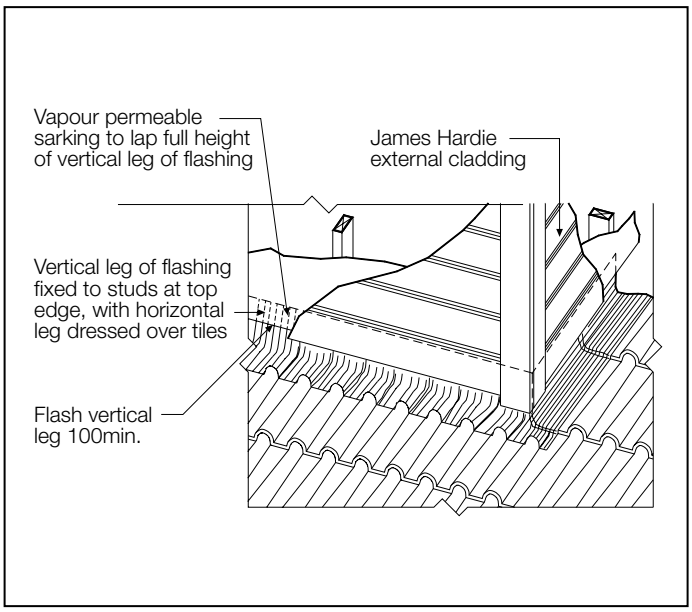

FIGURE 3 SARKING REQUIREMENT FOR EXPOSED CONDITIONS

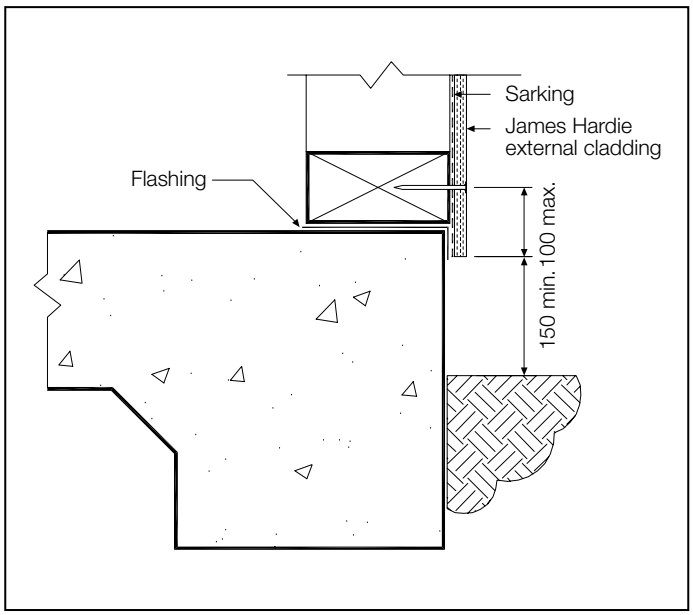

FIGURE 4 TYPICAL DETAIL AT GROUND LEVEL

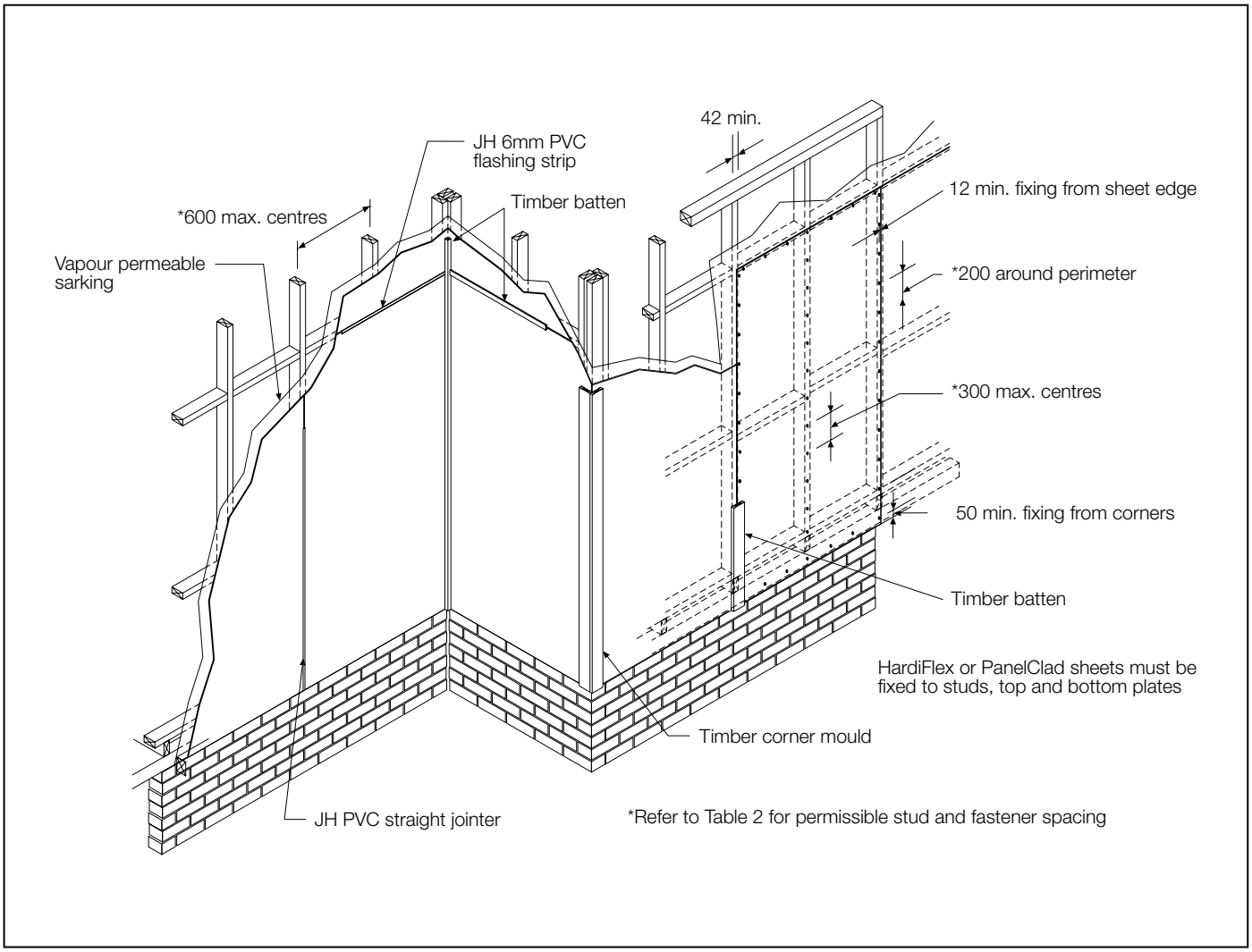

FIGURE 5 FIXING AND FRAMING

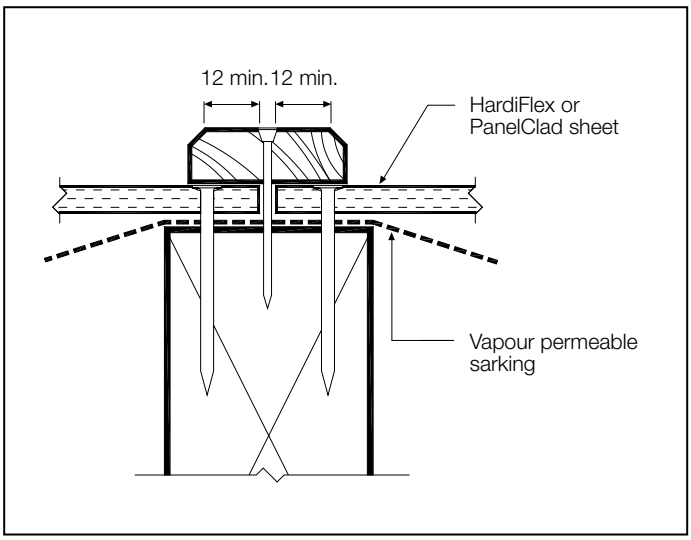

FIGURE 6 TIMBER BATTEN JOINT

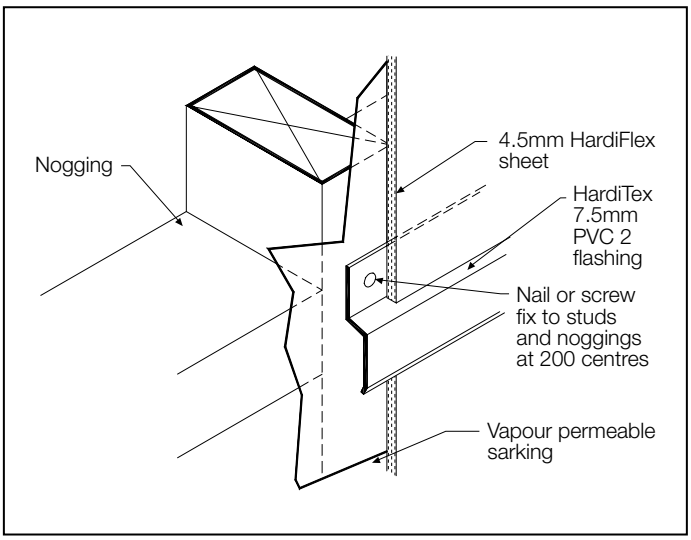

FIGURE 9 DRIP STRIP JOINT

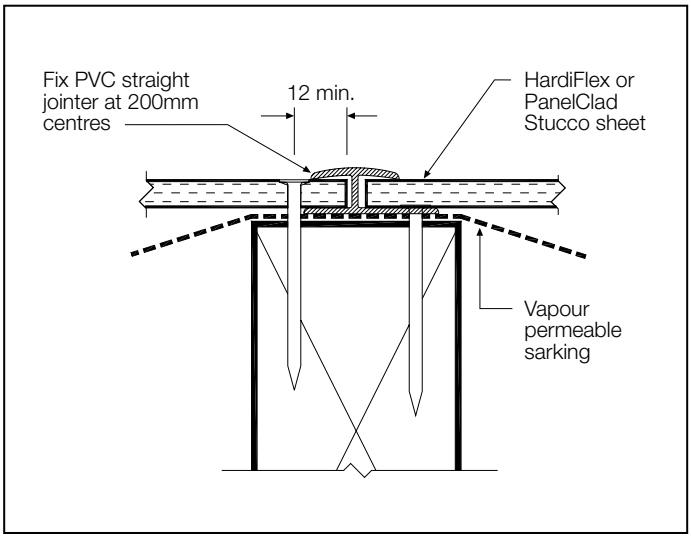

FIGURE 7 PVC STRAIGHT JOINTER

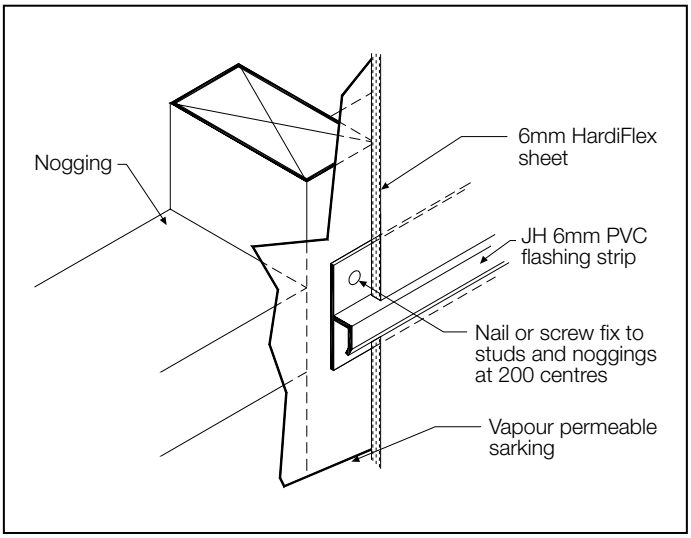

FIGURE 10 HORIZONTAL FLASHING MOULD

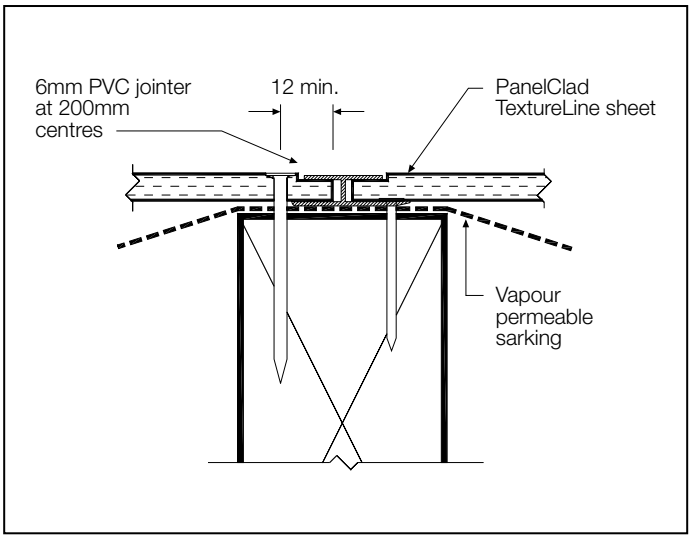

FIGURE 8 TEXTURELINE JOINT

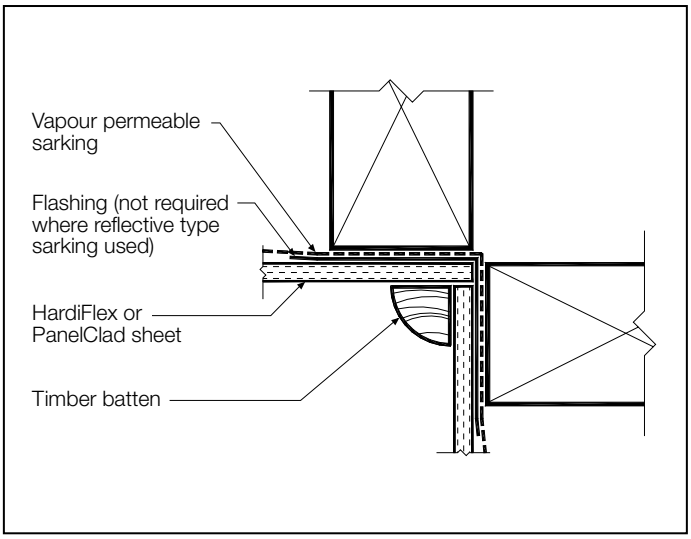

FIGURE 11 TIMBER BATTENING INTERNAL CORNER

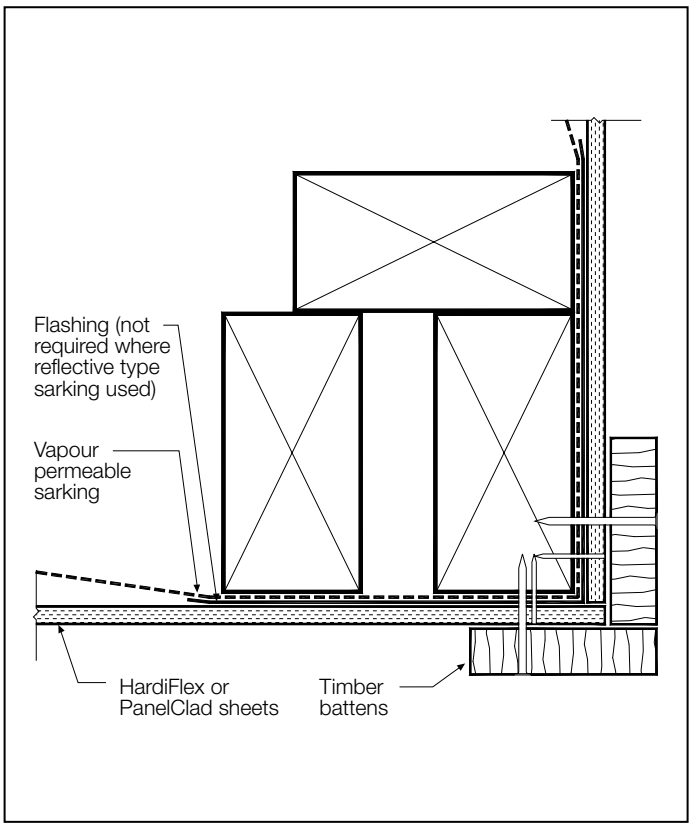

FIGURE 12 TIMBER BATTENING EXTERNAL CORNER

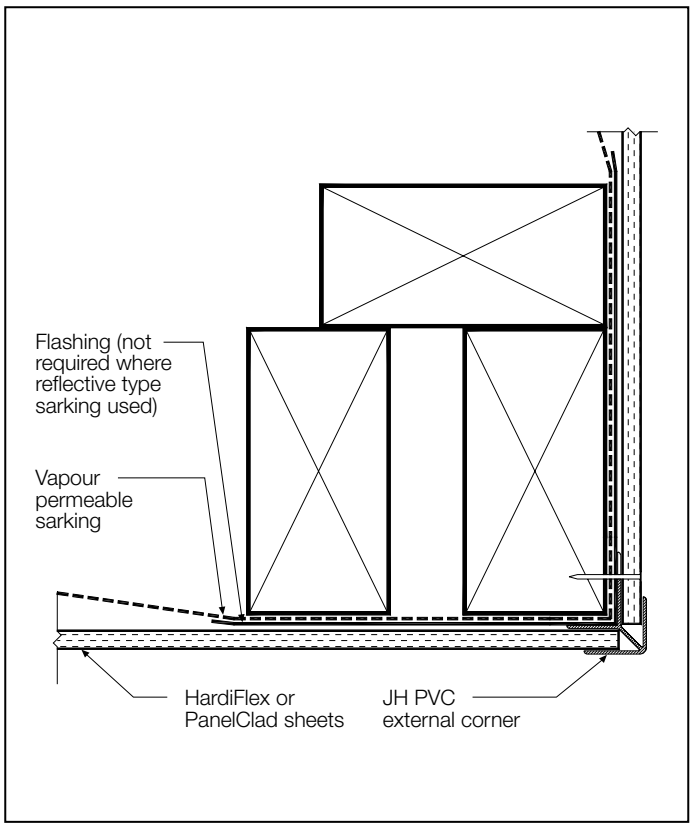

FIGURE 14 PVC EXTERNAL CORNER

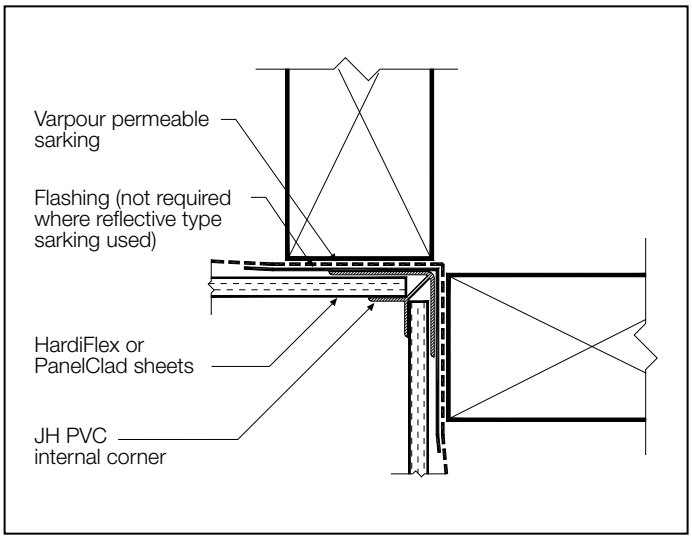

FIGURE 13 PVC INTERNAL CORNER

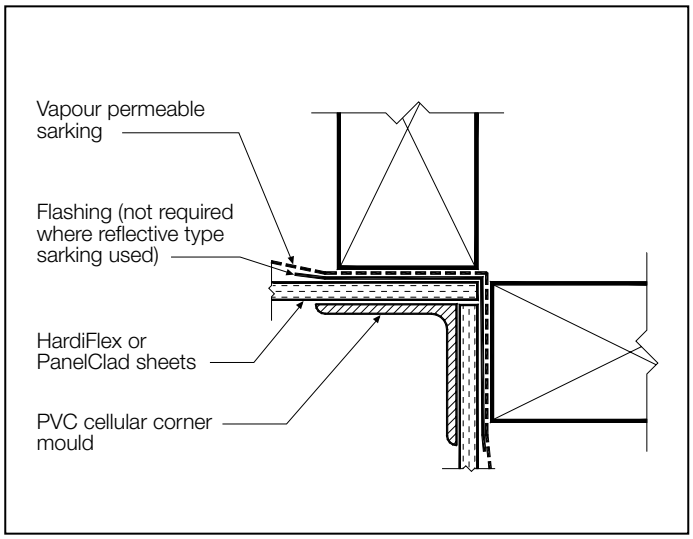

FIGURE 15 PVC CELLULAR CORNER MOULD

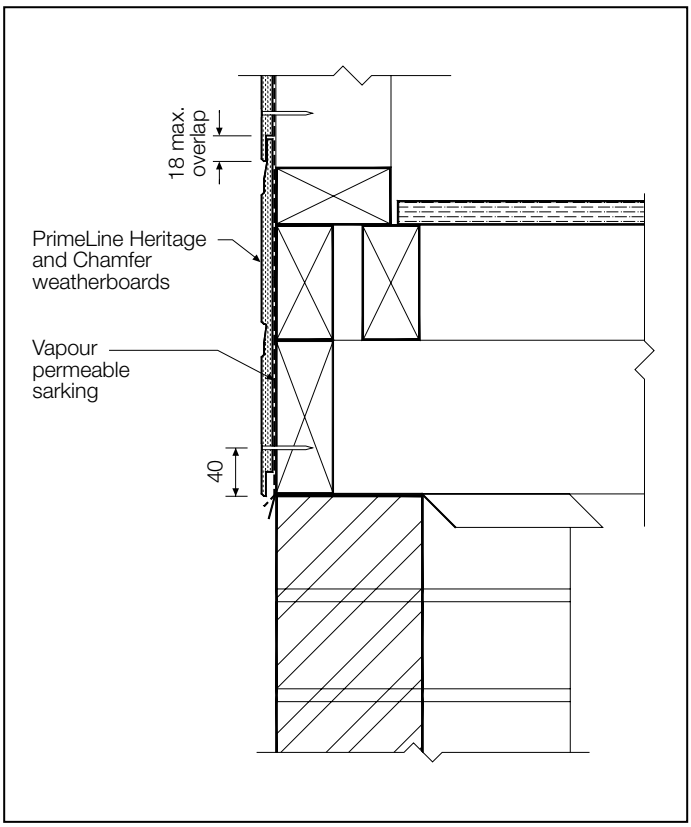

FIGURE 16 FIXING THE FIRST PRIMELINE HERITAGE AND CHAMFER WEATHERBOARD

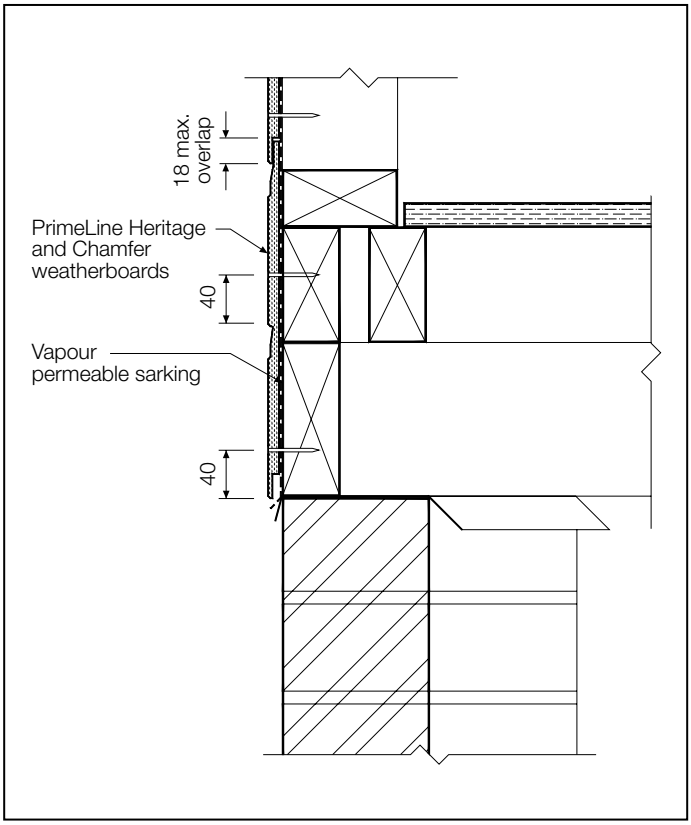

FIGURE 17 FIXING PRIMELINE HERITAGE AND CHAMFER WEATHERBOARDS IN N4/C2, N5/C3 WIND REGIONS

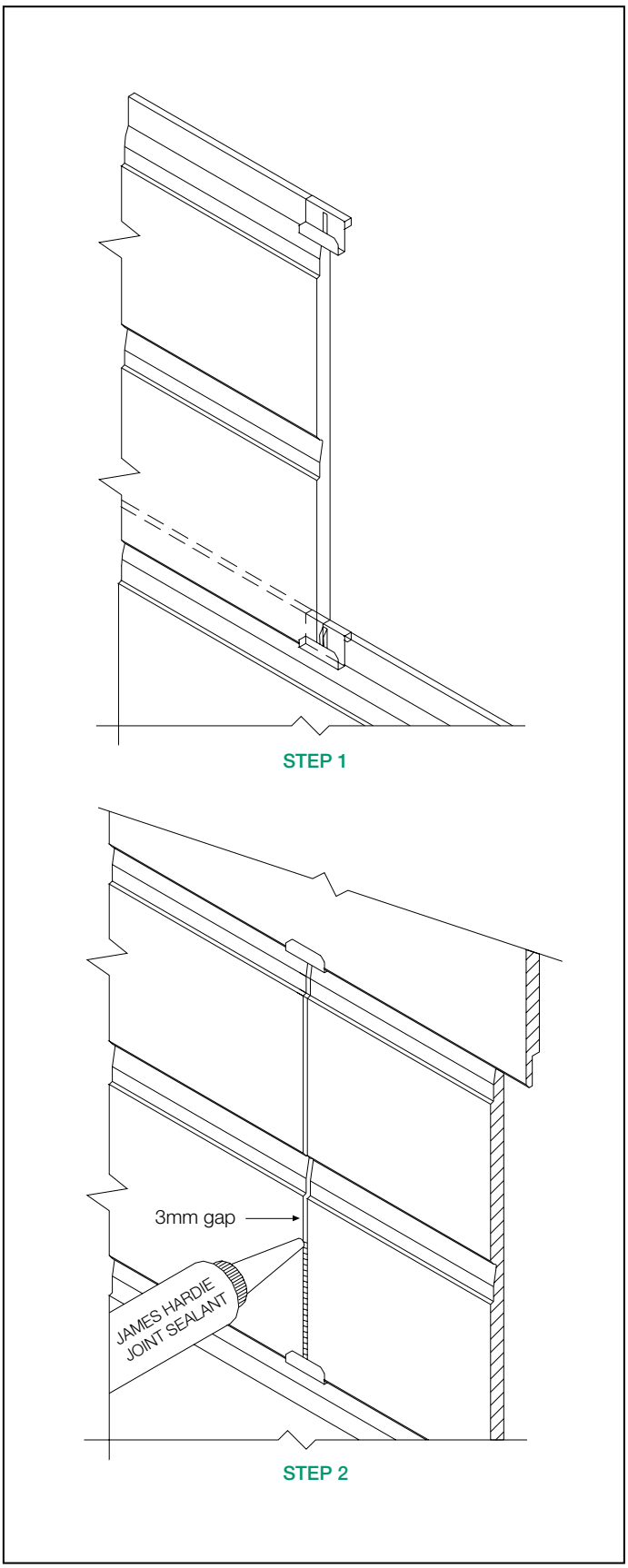

FIGURE 18 UNICLIP ACCESSORY FOR PRIMELINE HERITAGE AND CHAMFER WEATHERBOARDS OFF-STUD JOINTING

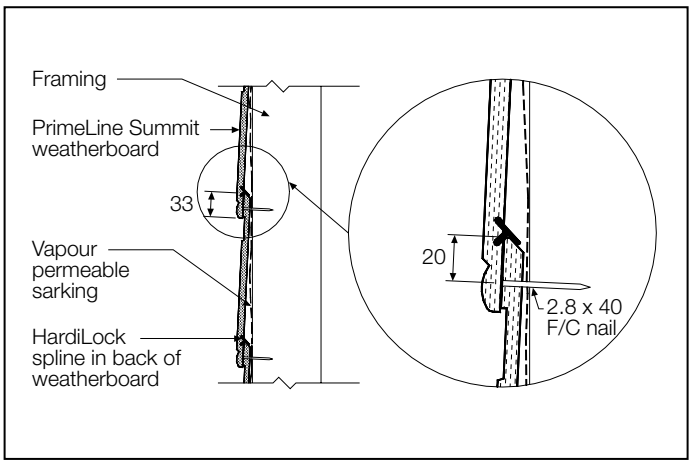

FIGURE 19 NAIL SPACINGS FOR PRIMELINE SUMMIT WEATHERBOARDS

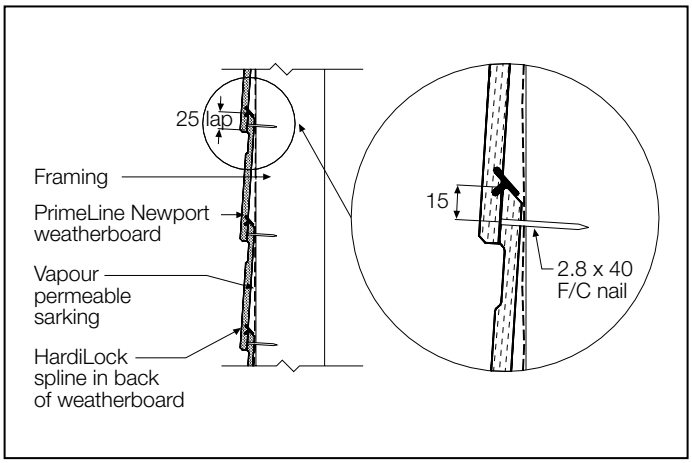

FIGURE 20 NAIL SPACING FOR PRIMELINE NEWPORT WEATHERBOARDS

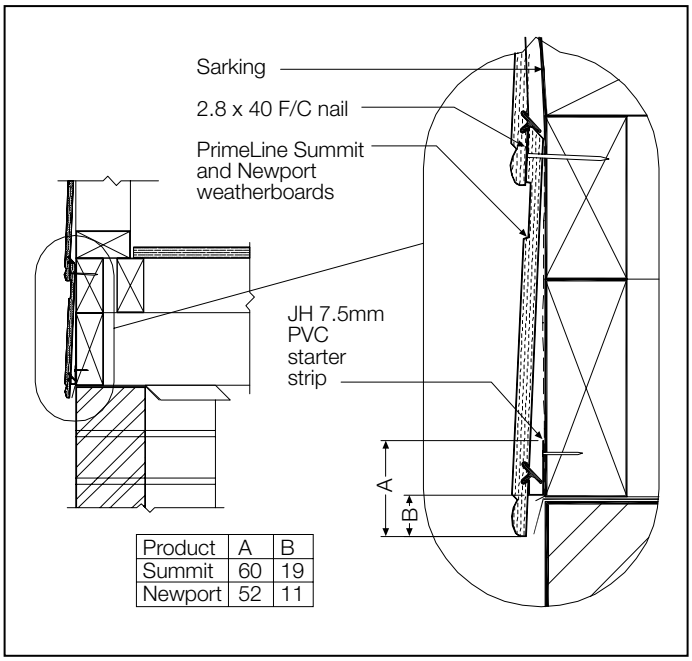

Product	A	B
Summit	60	19
Newport	52	11

FIGURE 21 INSTALLING FIRST PRIMELINE SUMMIT OR NEWPORT WEATHERBOARD

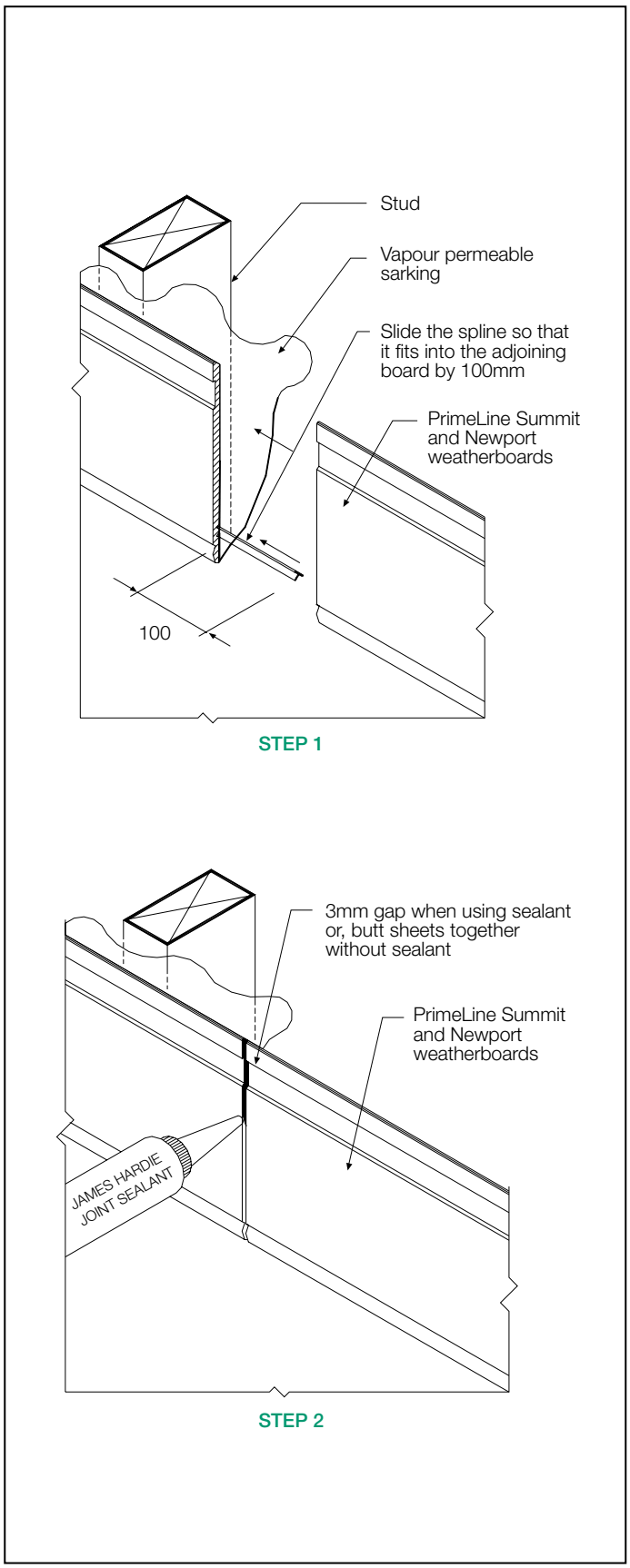

FIGURE 22 OFF-STUD JOINTING

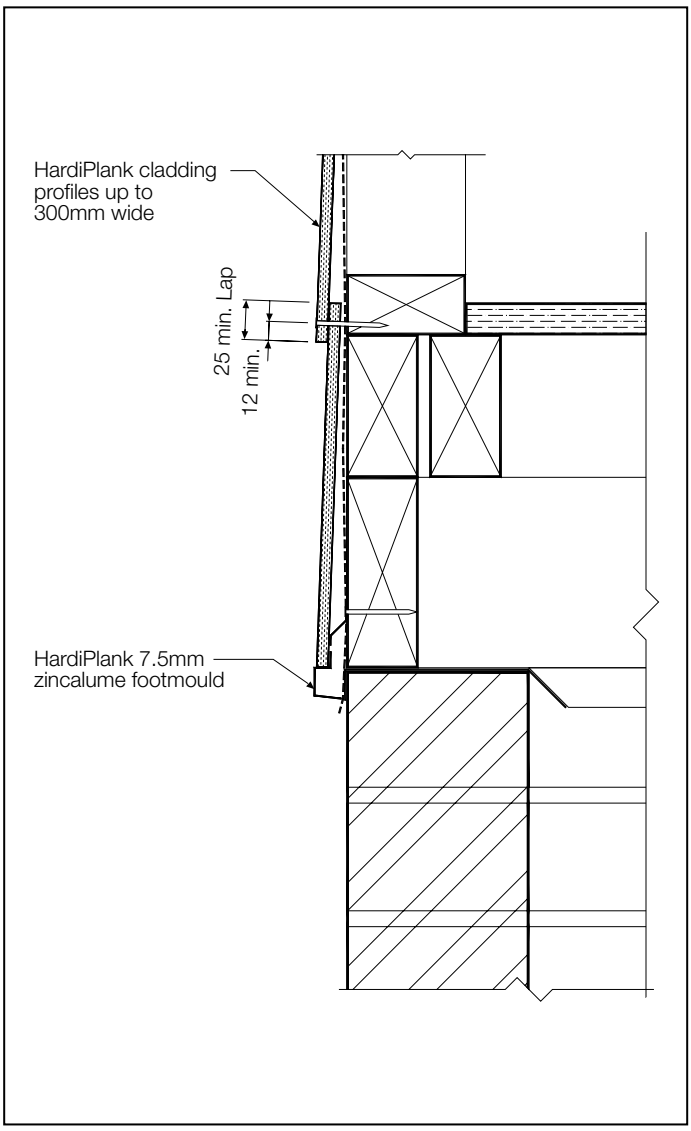

FIGURE 23 NAIL SPACINGS AND LAP FOR HARDIPLANK CLADDING

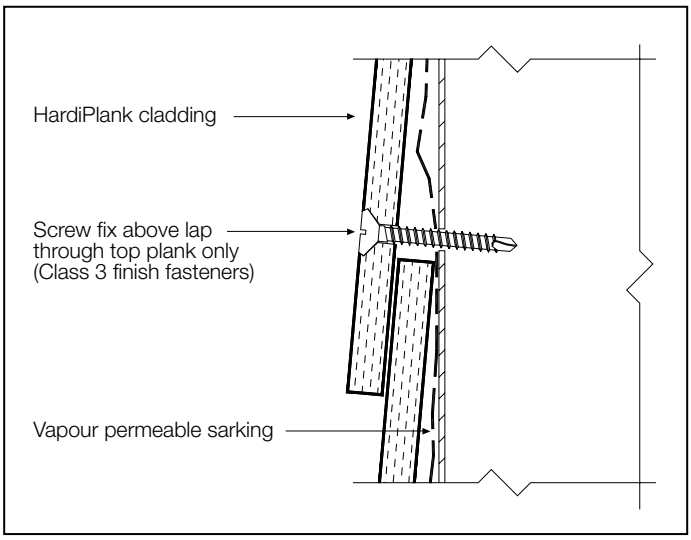

FIGURE 24 SCREW FIXING TO STEEL FRAME

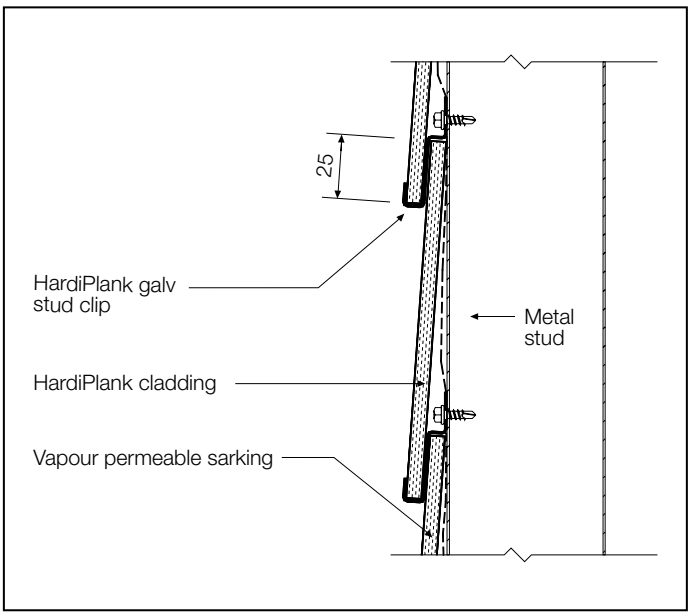

FIGURE 25 FIXING HARDIPLANK STUD CLIPS

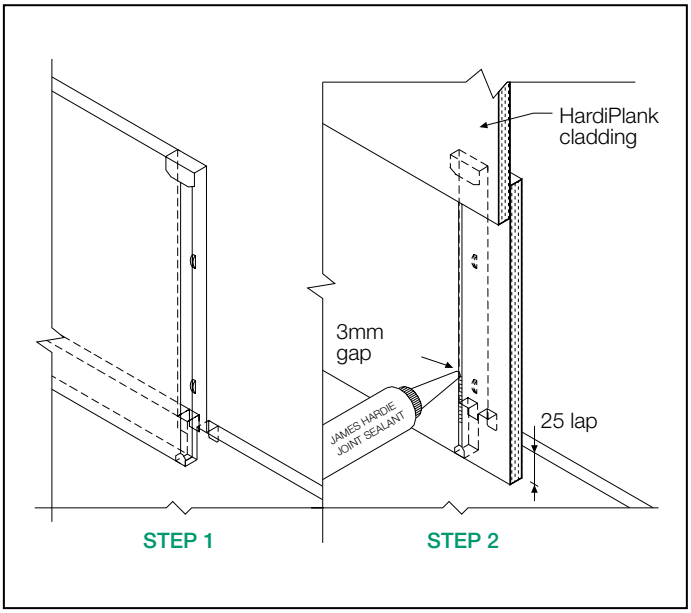

FIGURE 26 FITTING METAL SOAKER

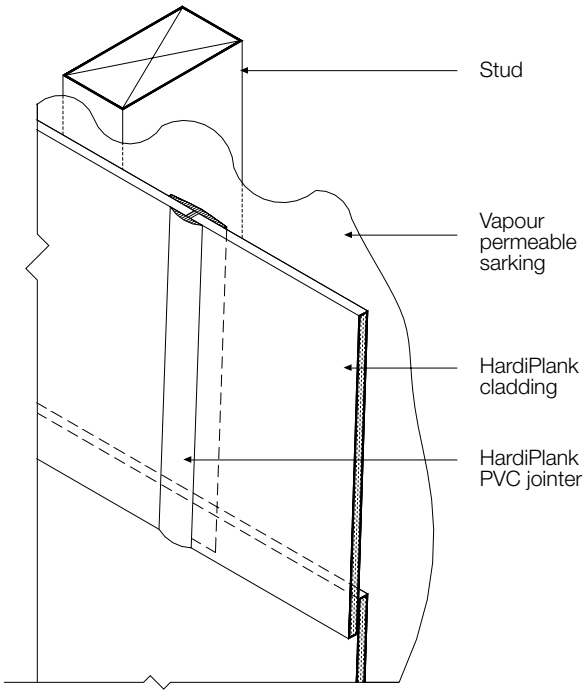

FIGURE 27 PVC JOINTING STRIP

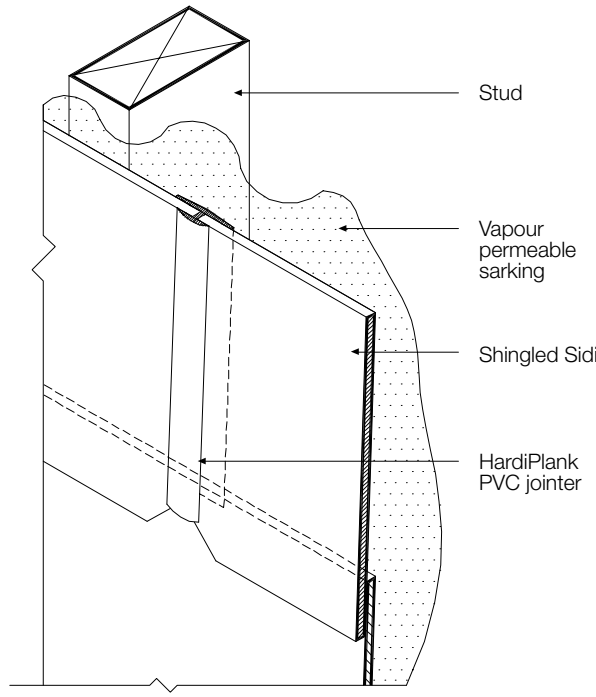

FIGURE 28 SHINGLED SIDING JOINTING STRIP

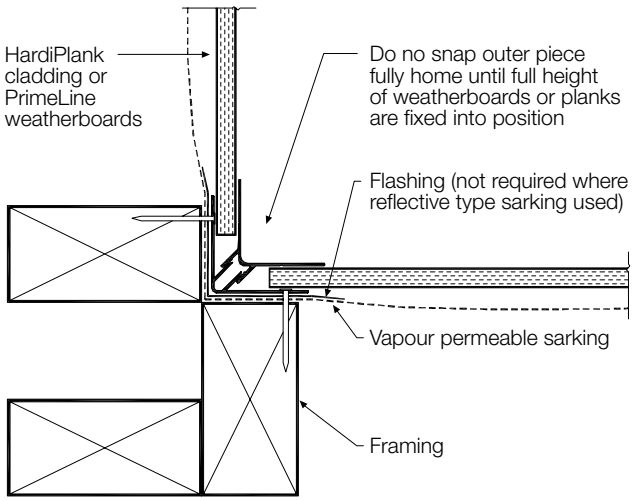

FIGURE 29 INTERNAL CORNER OPTION 1

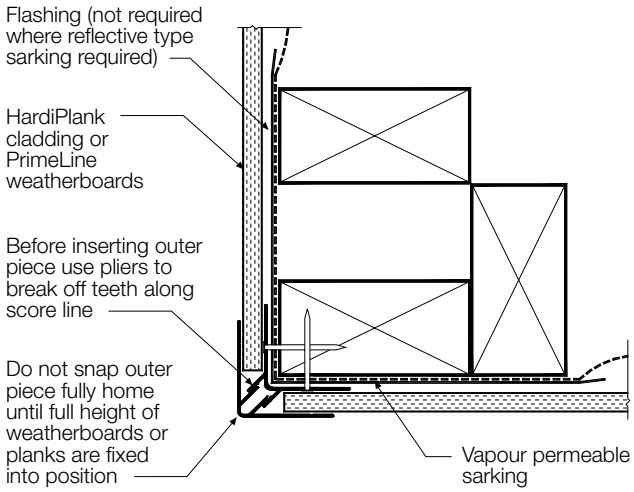

FIGURE 30 EXTERNAL CORNER OPTION 1

NOTE

For PrimeLine Heritage and Chamfer Weatherboards only, use pliers to break off teeth along score line and fix.

Warning: Do not snap pieces together until final attachment to wall.

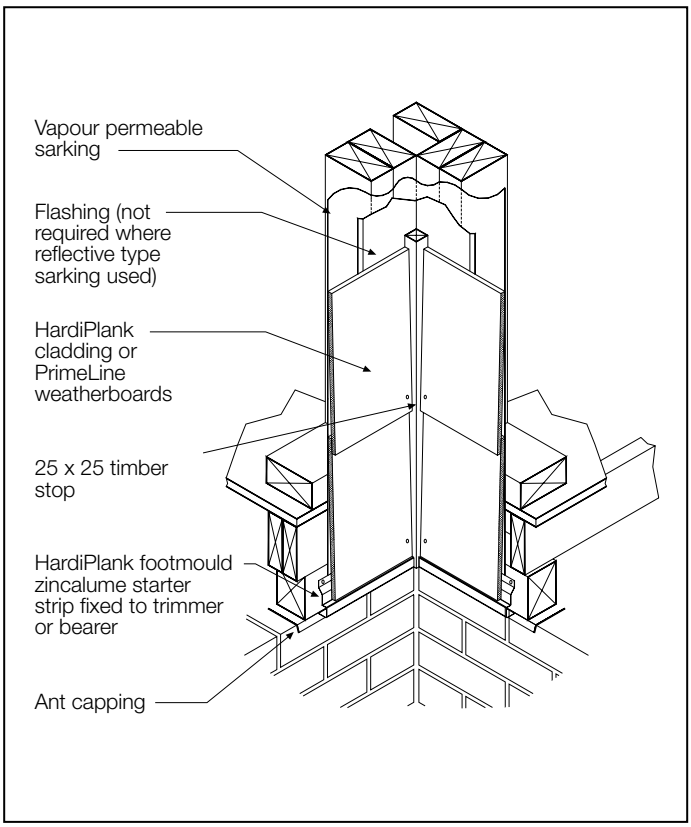

FIGURE 31 INTERNAL CORNER OPTION 2

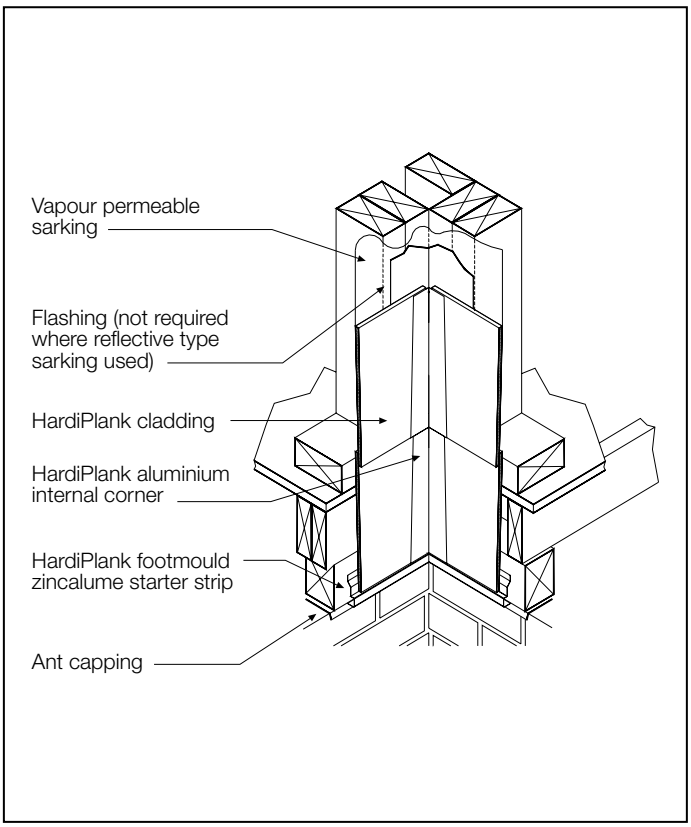

FIGURE 33 INTERNAL CORNER OPTION 3

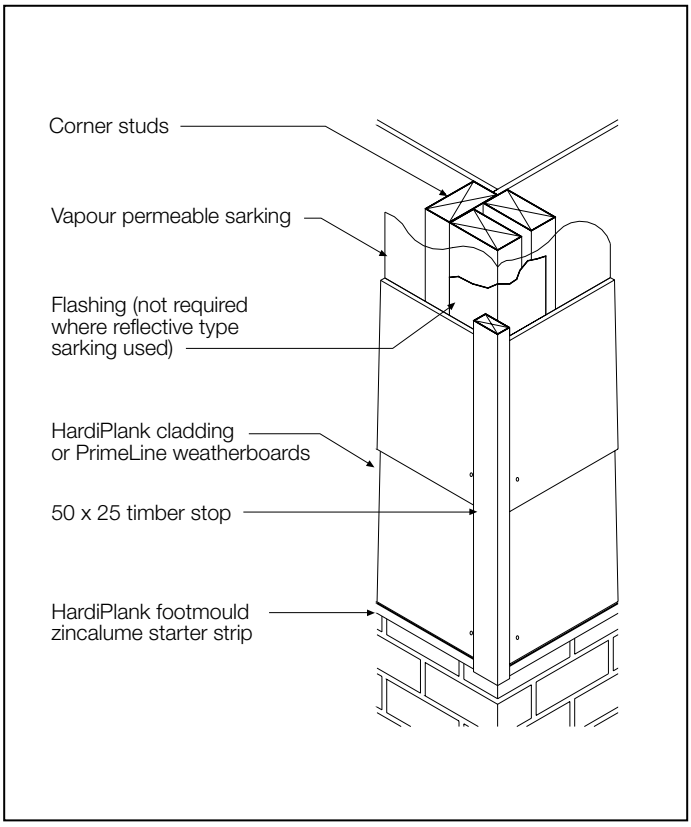

FIGURE 32 EXTERNAL CORNER OPTION 2

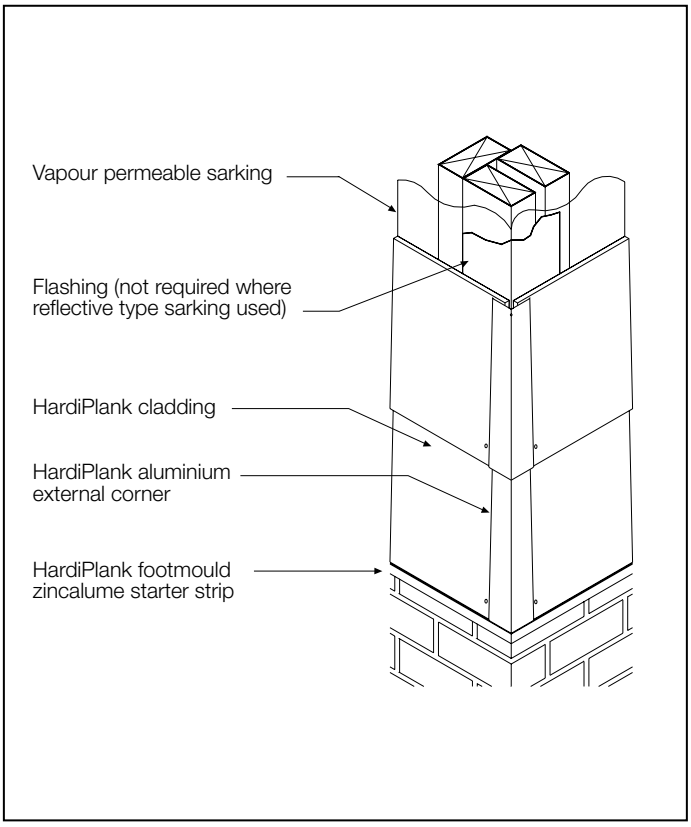

FIGURE 34 INTERNAL CORNER OPTION 3

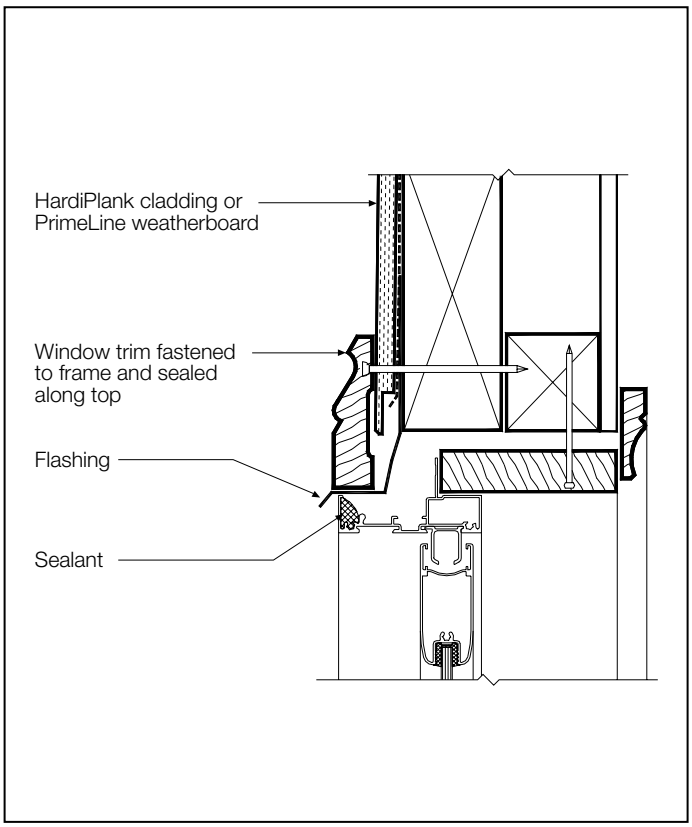

FIGURE 35 WINDOW HEAD DETAIL

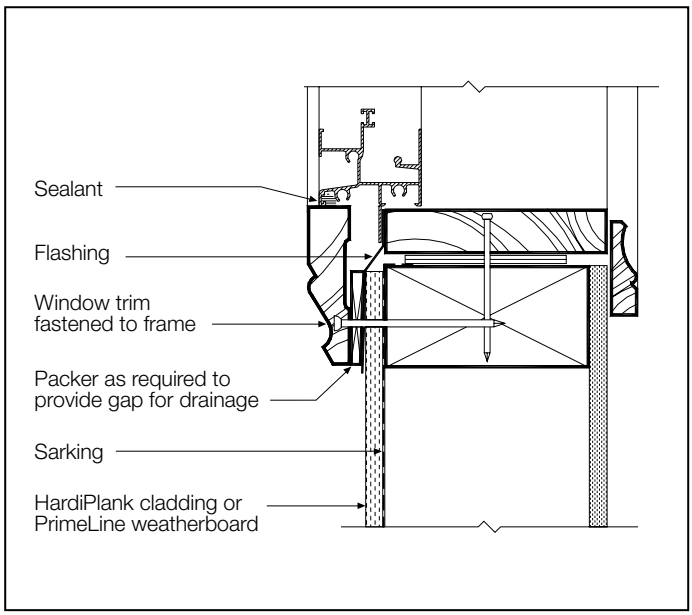

FIGURE 37 WINDOW SILL DETAIL

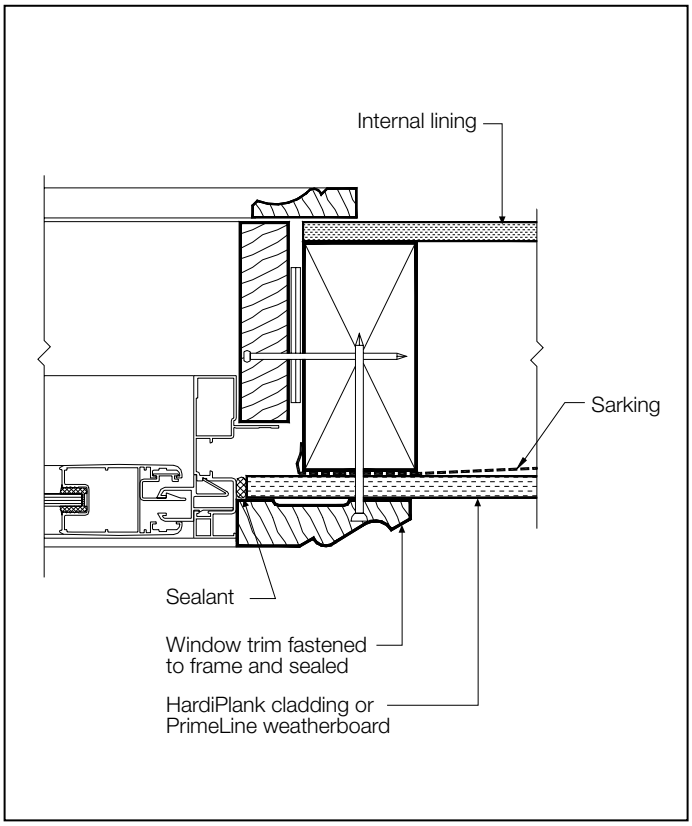

FIGURE 36 WINDOW JAMB DETAIL

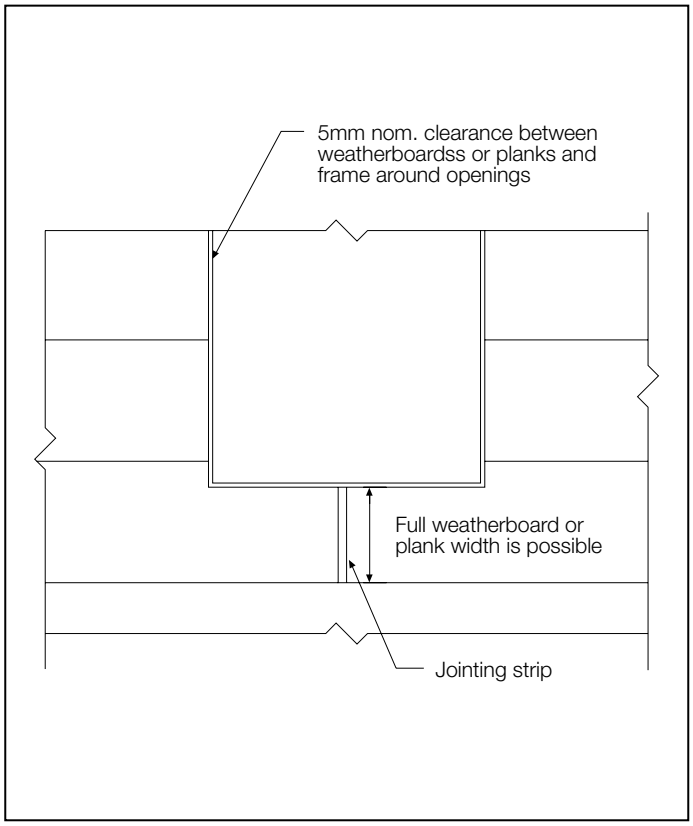

FIGURE 38 CUTTING AROUND OPENINGS

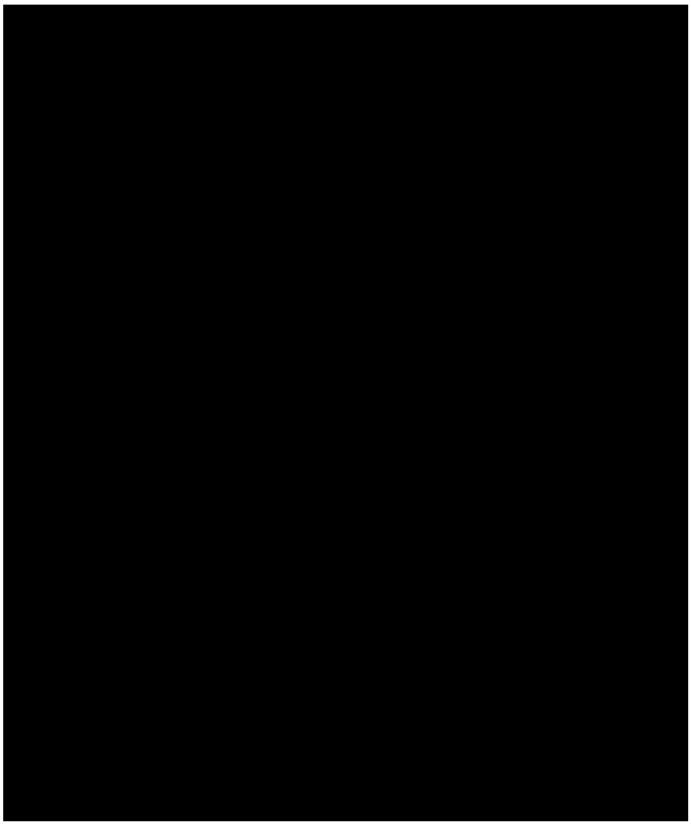

FIGURE 39

James Hardie Australia Pty Limited ("James Hardie") warrants for a period of 25 years from the date of purchase that the PrimeLineweatherboards and HardiPlank cladding, and for a period of 10 years from the date of purchase that the PanelClad sheets and HardiFlex sheets (JH External Cladding), (the "Product"), will be free from defects due to defective factory workmanship or materials and, subject to compliance with the conditions below, will be resistant to cracking, rotting, fire and damage from termite attacks to the extent set out in James HardieÕs relevant published literature current at the time of installation. James Hardie warrants for a period of 12 months from the date of purchase that the accessories supplied by James Hardie will be free from defects due to defective factory workmanship
or materials.

Nothing in this document shall exclude or modify any legal rights a customer may have under the Trade Practices Act or otherwise which cannot be excluded or modified at law.

CONDITIONS OF WARRANTY
The warranty is strictly subject to the following conditions:

a) James Hardie will not be liable for breach of warranty unless the claimant provides proof of purchase and makes a written claim either within 30 days after the defect would have become reasonably apparent or, if the defect was reasonably apparent prior to installation, then the claim must be made prior to installation;

b) this warranty is not transferable;

c) the Product must be installed and maintained strictly in accordance with the relevant James Hardie literature current at the time of installation and must be installed in conjunction with the components or products specified in the literature. Further, all other products, including coating and jointing systems, applied to or used in conjunction with the Product must be applied or installed and maintained strictly in accordance with the relevant manufacturerÕs instructions and good trade practice;

d) the project must be designed and constructed in strict compliance with all relevant provisions of the current BCA, regulations and standards;

e) the claimantÕs sole remedy for breach of warranty is (at James HardieÕs option) that James Hardie will either supply replacement product, rectify the affected product or pay for the cost of the replacement or rectification of the affected product;

f) James Hardie will not be liable for any losses or damages (whether direct or indirect) including property damage or personal injury, consequential loss, economic loss or loss of profits, arising in contract or negligence or howsoever arising. Without limiting the foregoing James Hardie will not be liable for any claims, damages or defects arising from or in any way attributable to poor workmanship, poor design or detailing, settlement or structural movement and/or movement of materials to which the Product is attached, incorrect design of the structure, acts of God including but not limited to earthquakes, cyclones, floods or other severe weather conditions or unusual climatic conditions, efflorescence or performance of paint/coatings applied to the Product, normal wear and tear, growth of mould, mildew, fungi, bacteria, or any organism on any Product surface or Product (whether on the exposed or unexposed surfaces);

g) all warranties, conditions, liabilities and obligations other than those specified in this warranty are excluded to the fullest extent allowed by law;

h) if meeting a claim under this warranty involves re-coating of Products, there may be slight colour differences between the original and replacement Products due to the effects of weathering and variations in materials over time.

DISCLAIMER
The recommendations in James HardieÕs literature are based on good building practice, but are not an exhaustive statement of all relevant information and are subject to conditions (c), (d), (f) and (g) above. Further, as the successful performance of the relevant system depends on numerous factors outside the control of James Hardie (eg quality of workmanship and design) James Hardie shall not be liable for the recommendations in that literature and the performance of the relevant system, including its suitability for any purpose or ability to satisfy the relevant provisions of the Building Code of Australia ("BCA"), regulations and standards.